GBC - Rotor Lift

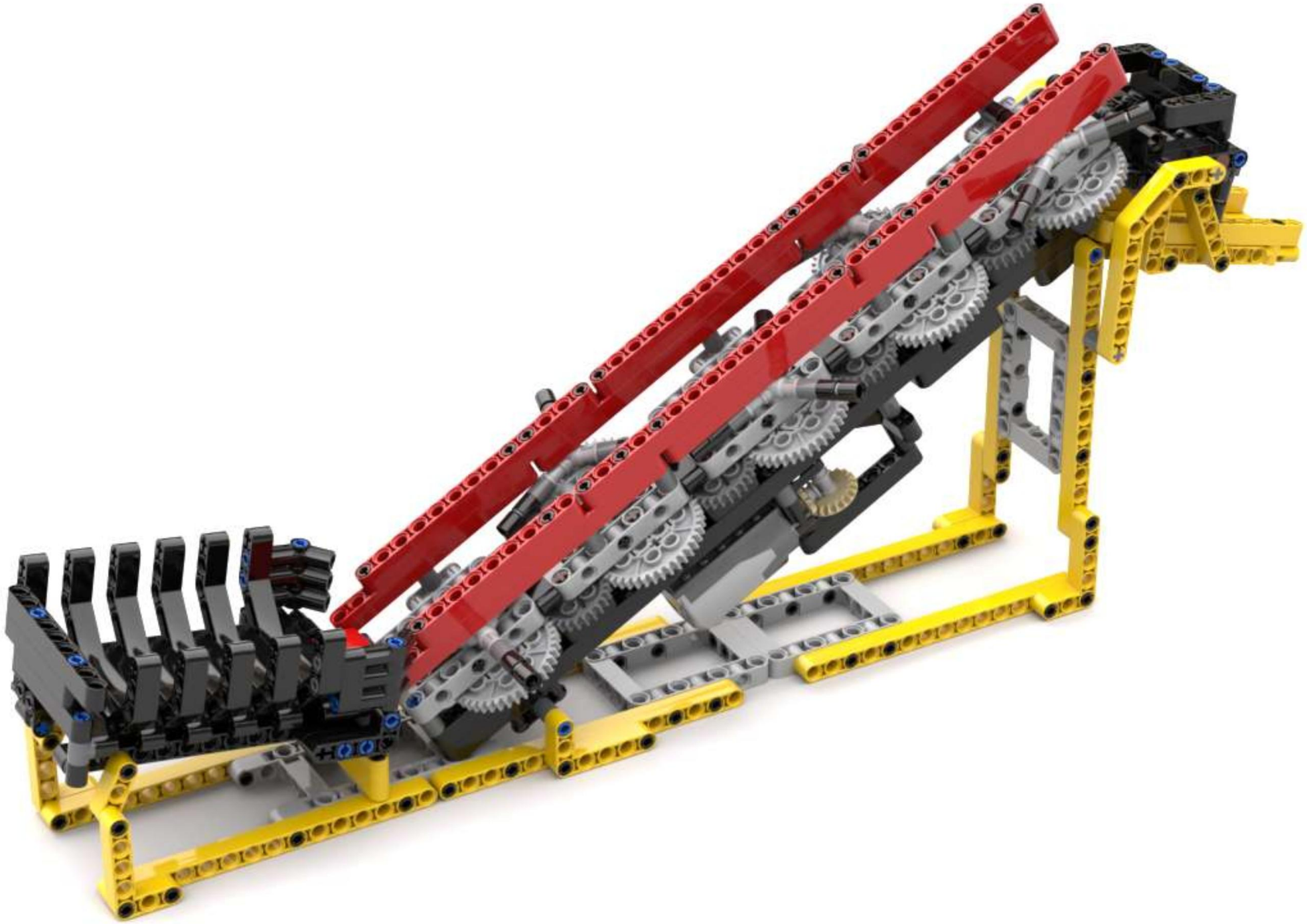

By: Stork

REV: 1.1

GBC Module - Rotor Lift

Copyright © 2018 by Staffan "Stork" Ihl
Created with Studio 2.0
staffan(AT)brickselectric.se
Revised to v1.1 April 2019

This was the first module i created before participating in Skaerbaek Fan Weekend 2017
Module is designed to run at full speed of regulator or battery pack.

Visit me on BrickLink and get your parts from Brick After Brick!
https://store.bricklink.com/stork

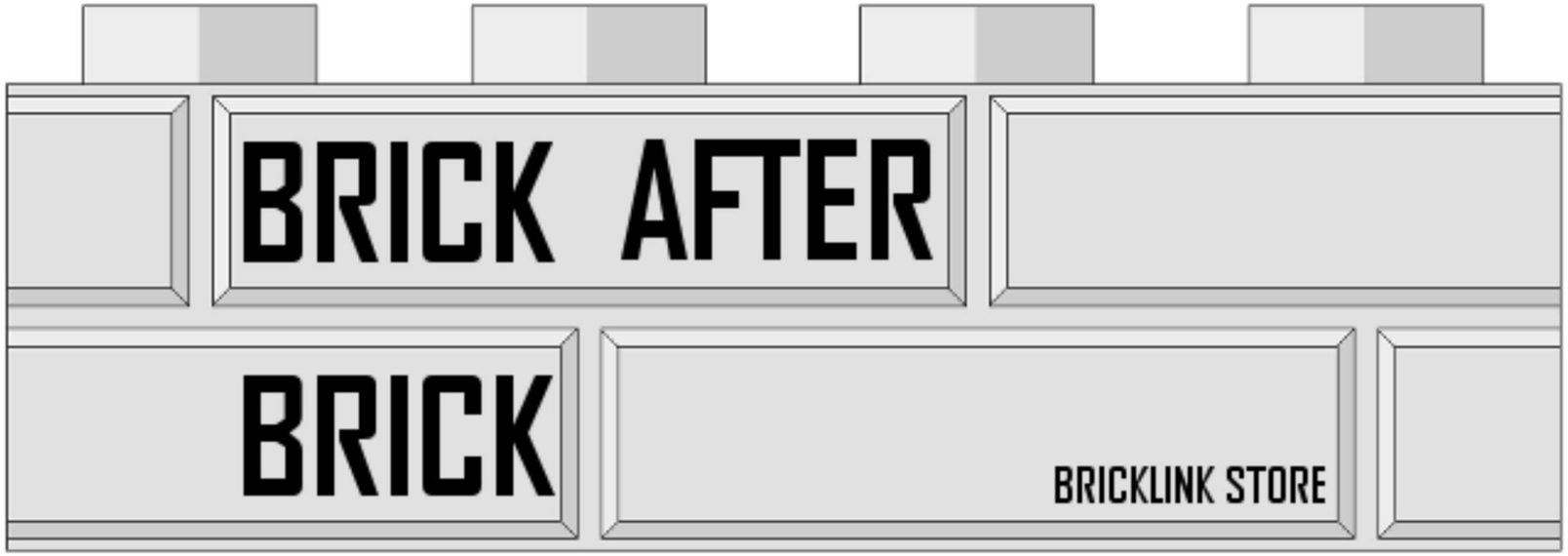

These instructions are for personal and non-profit use only.
Instructions may not be sold or used for any commercial purposes.

LEGO ® is a registered trademark of The Lego Group which does not sponsor, endorse or authorize these instructions or the model they depict.

1

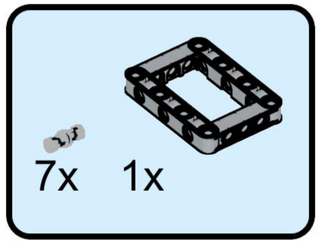

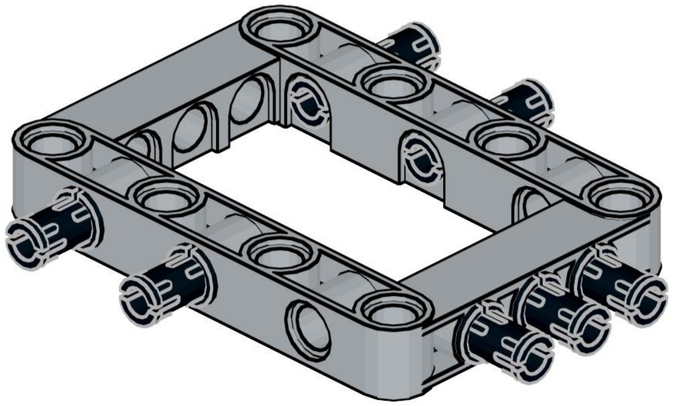

2

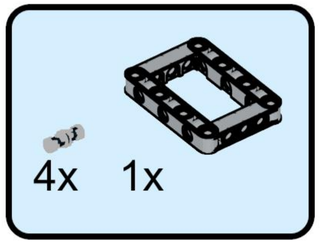

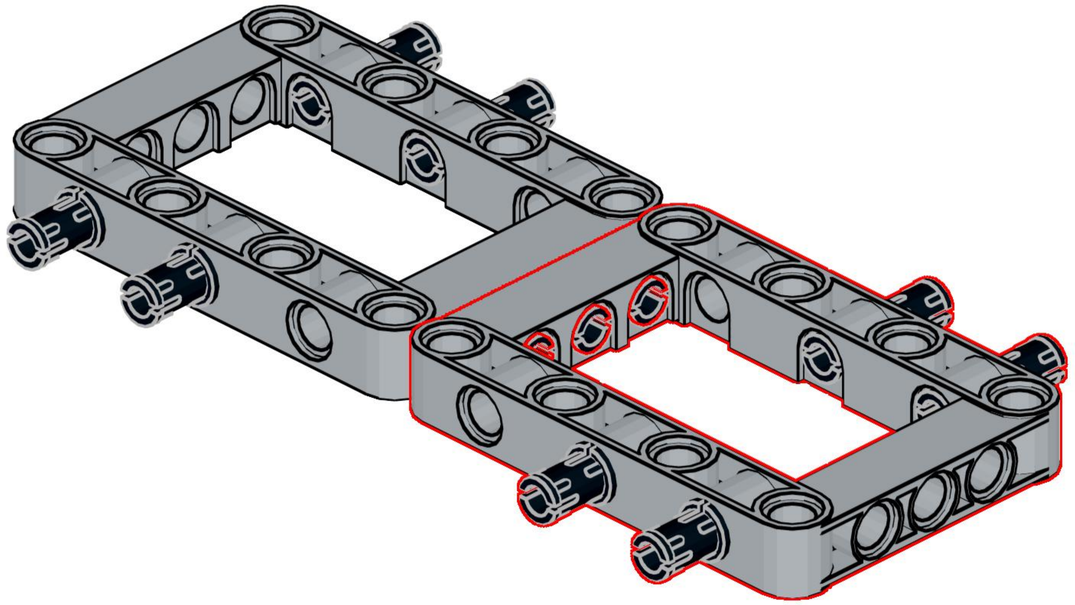

3

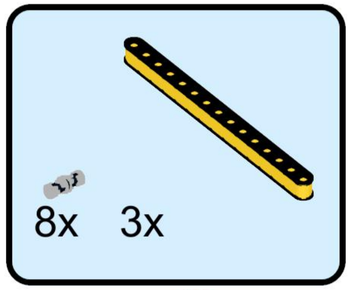

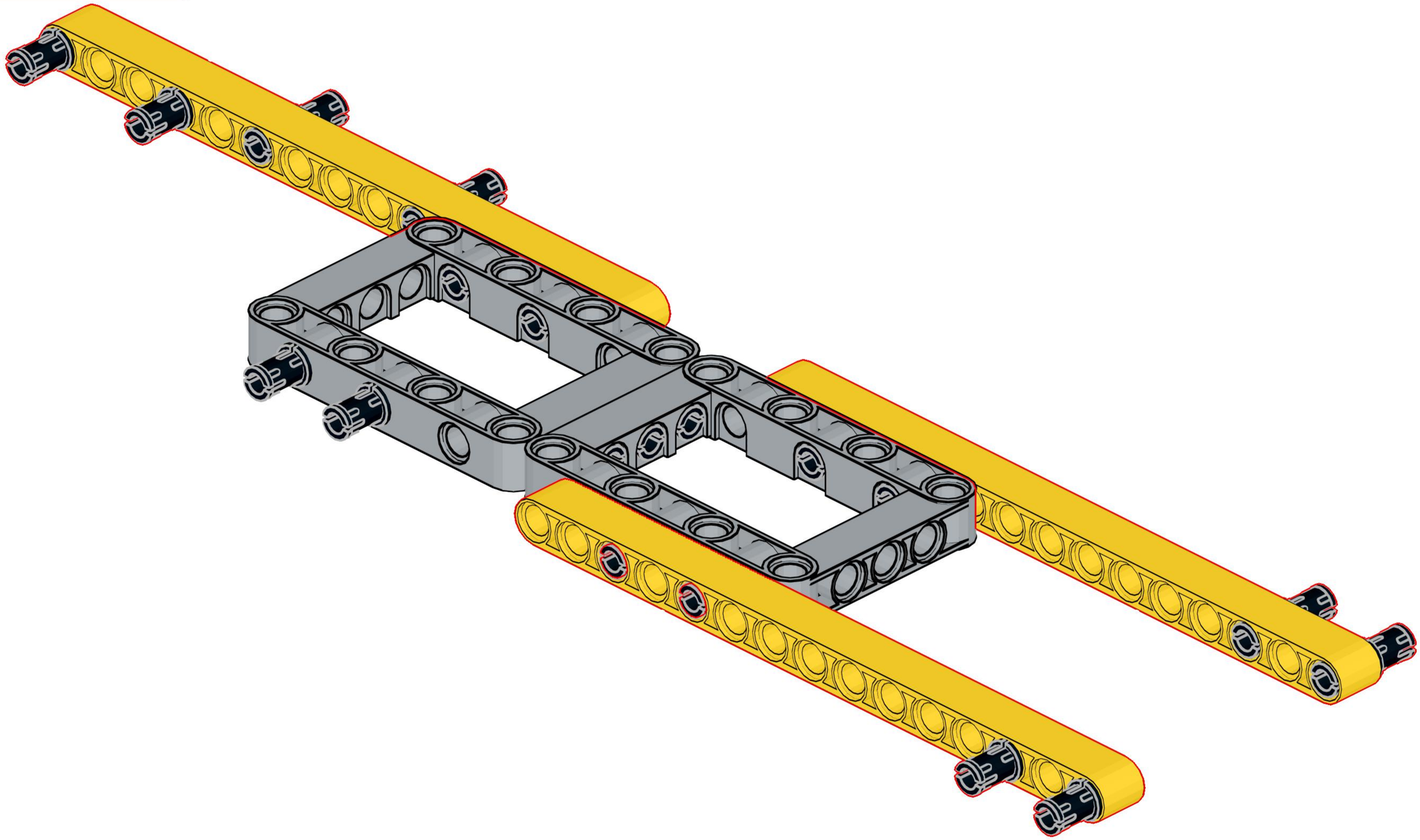

4

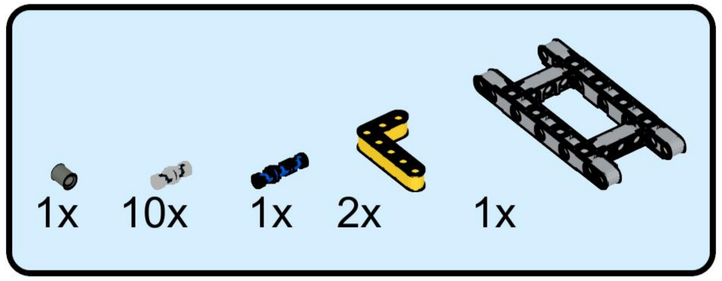

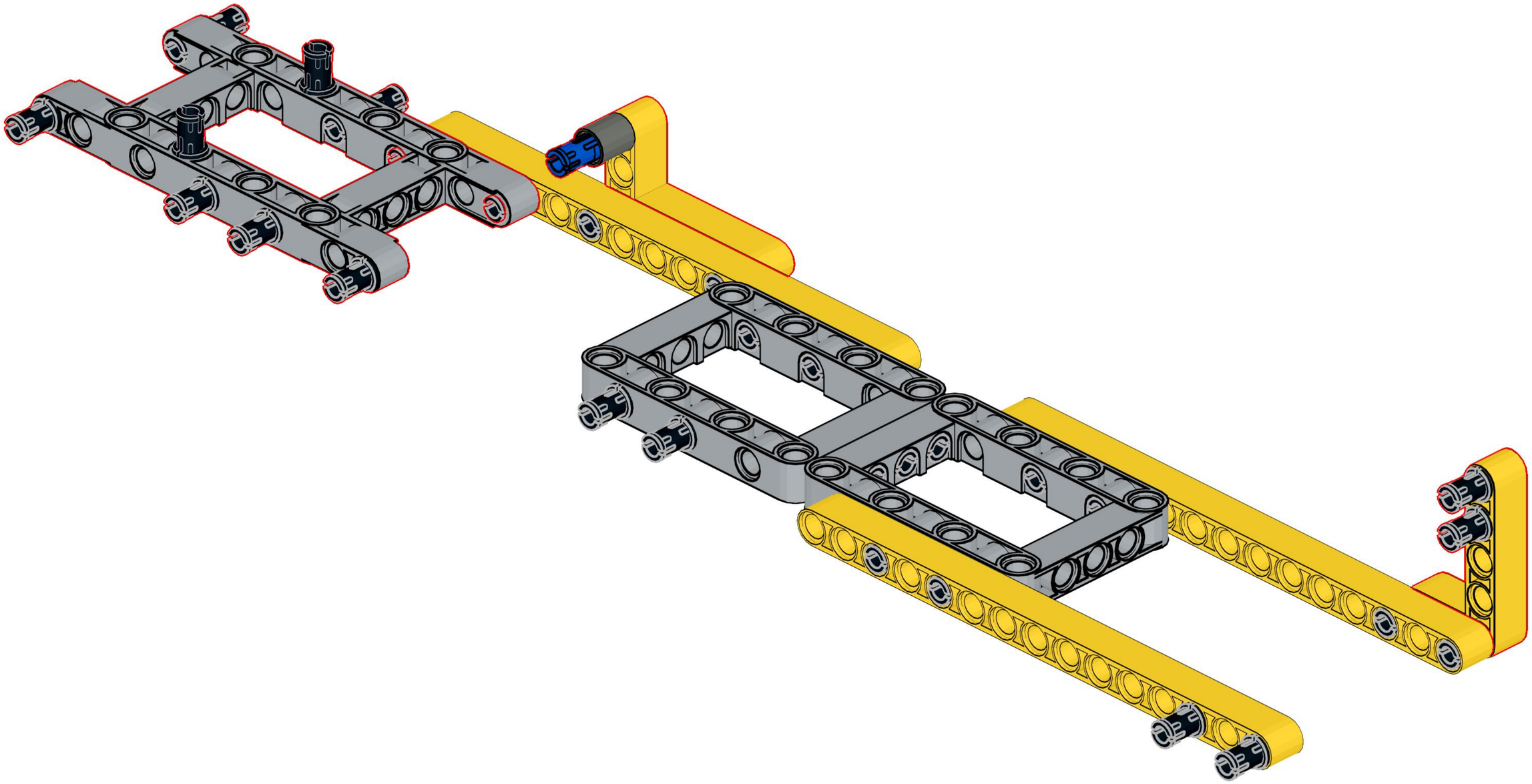

5

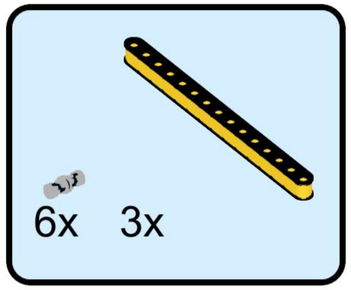

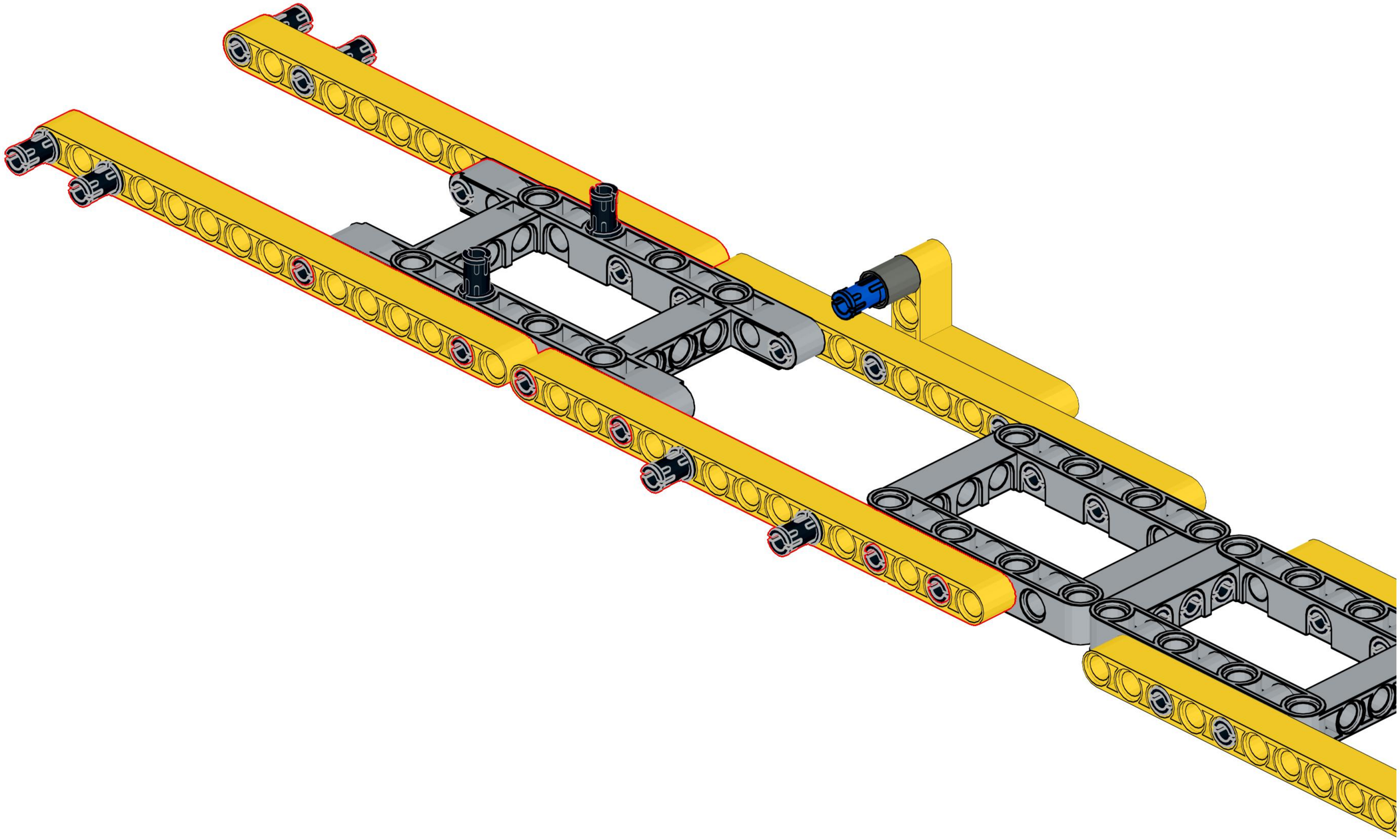

6

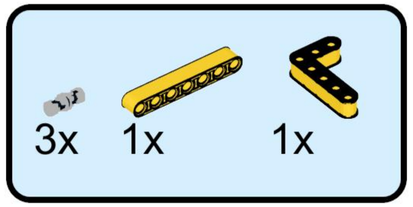

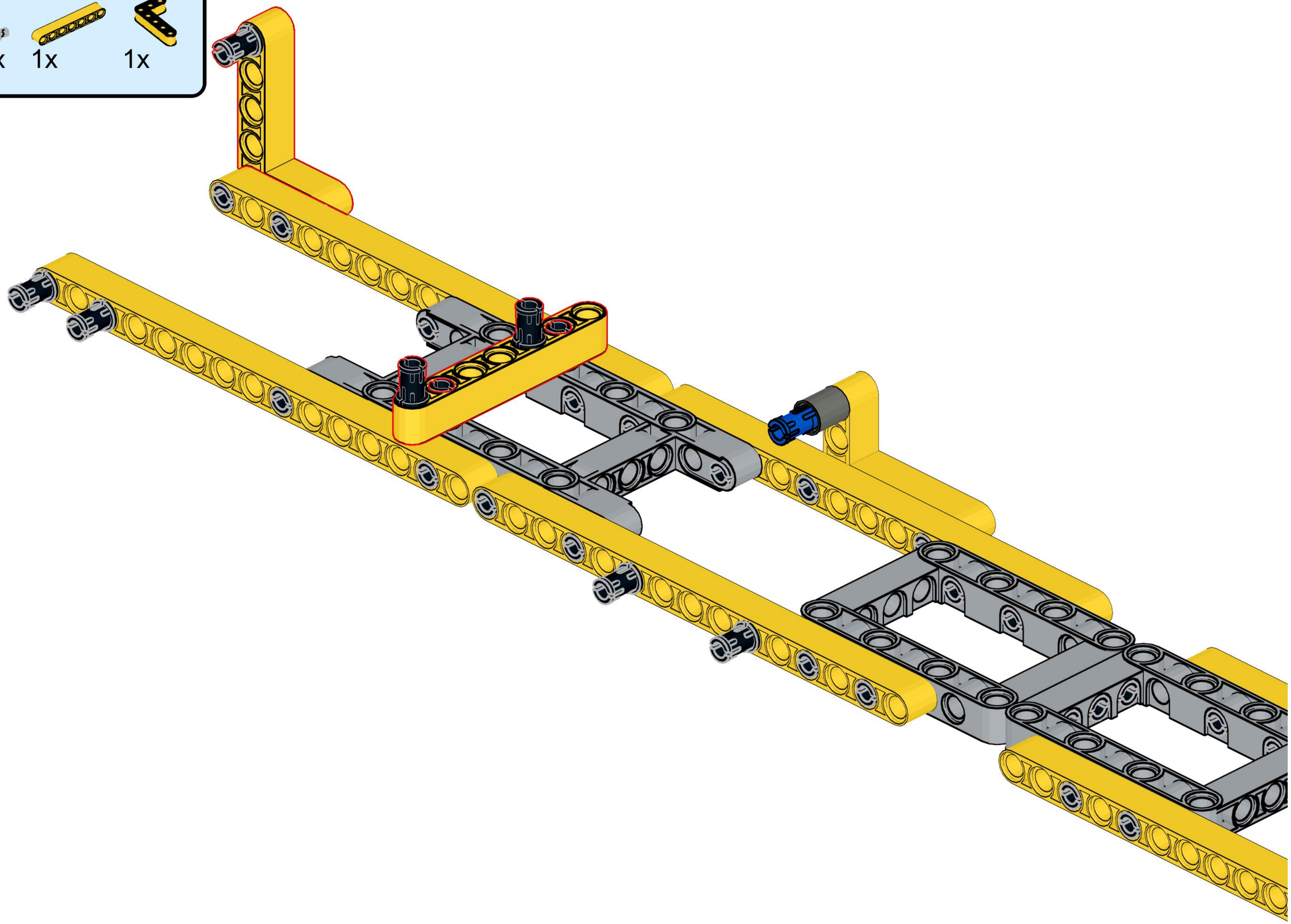

7

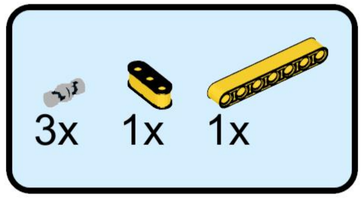

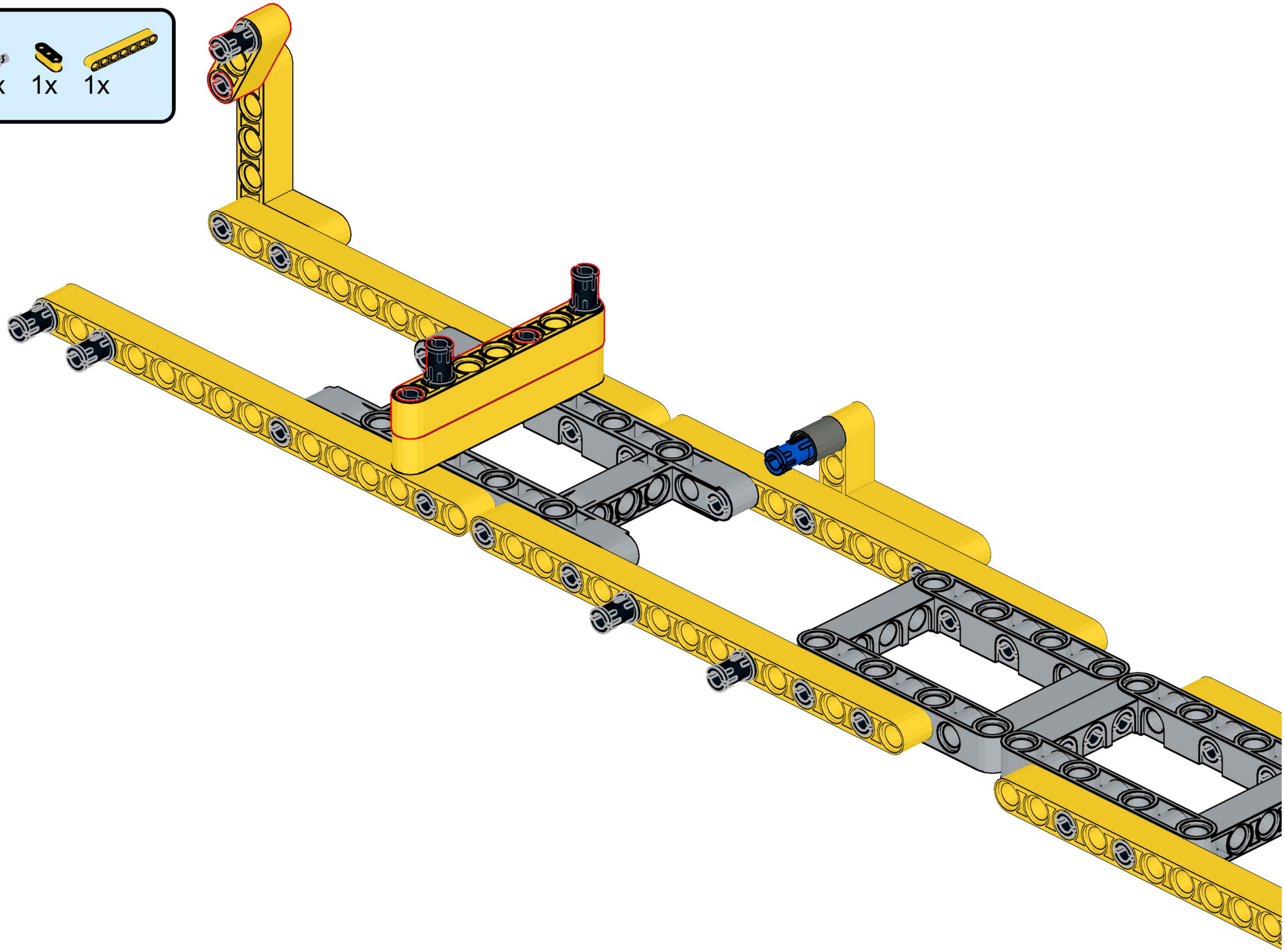

8

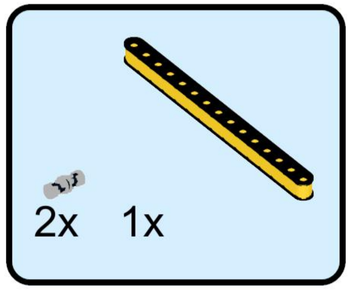

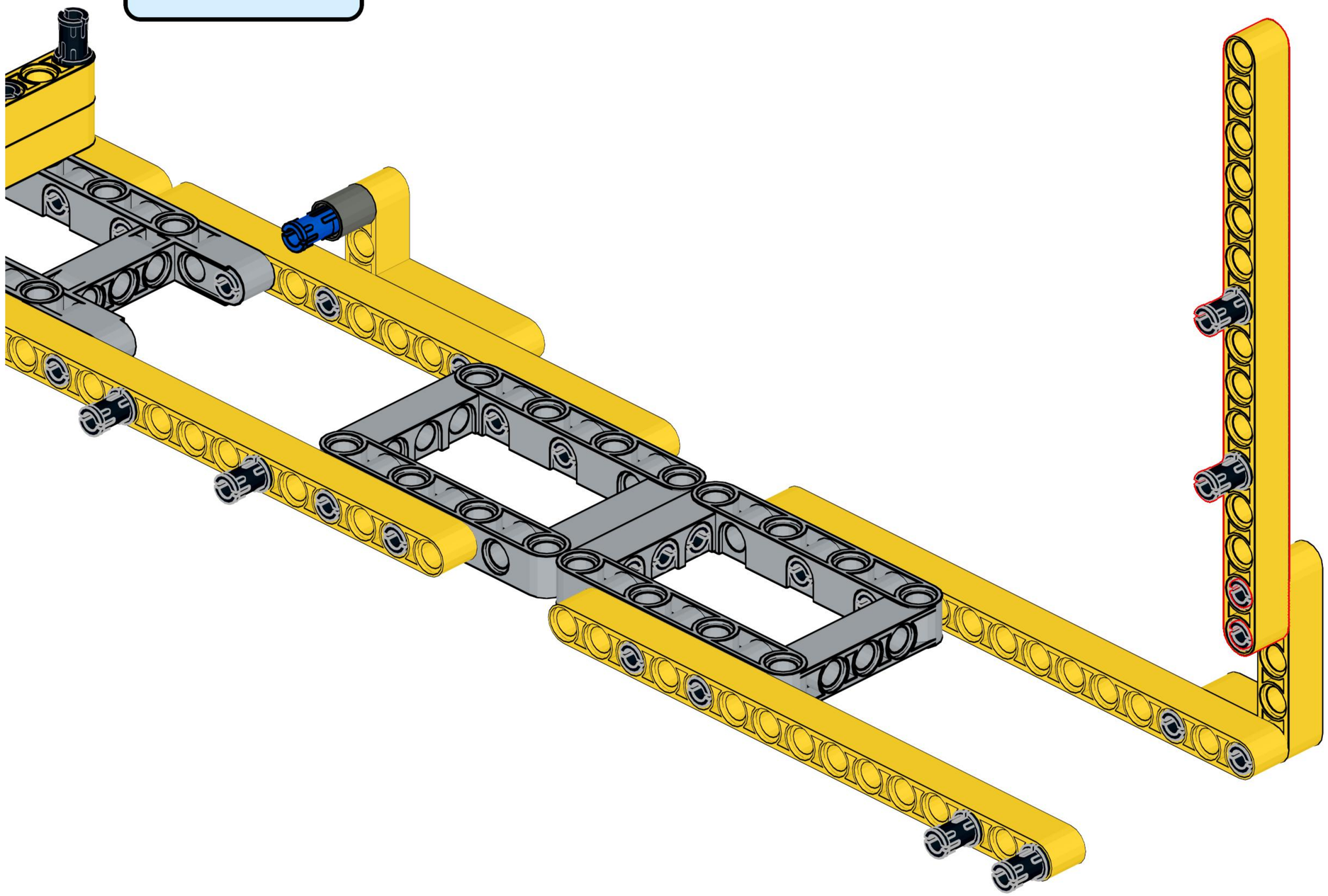

9

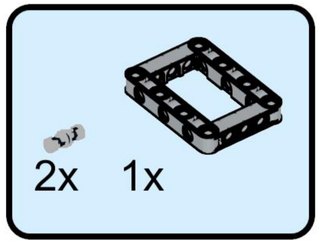

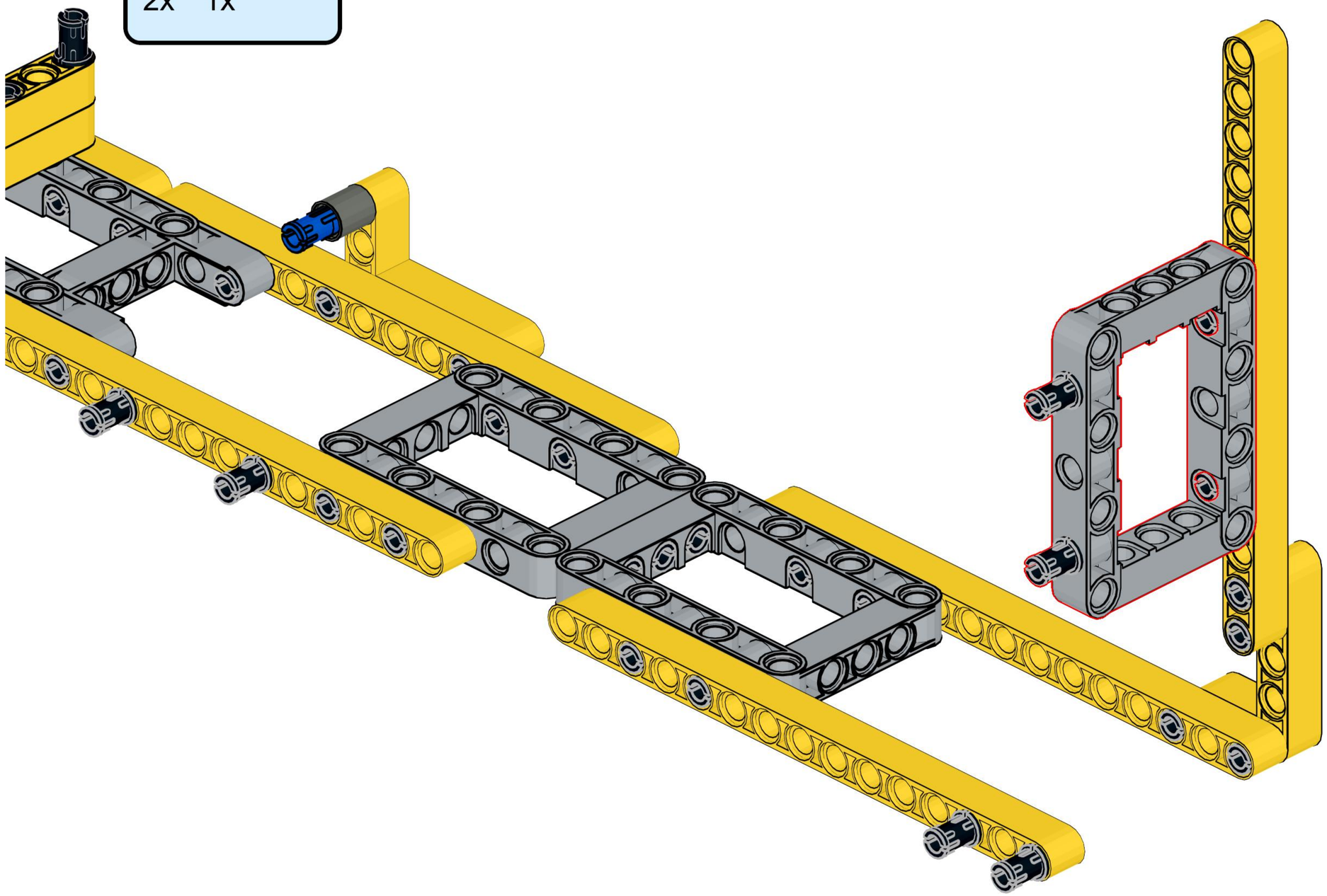

10

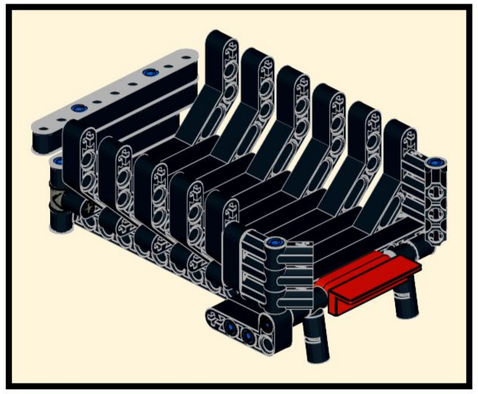

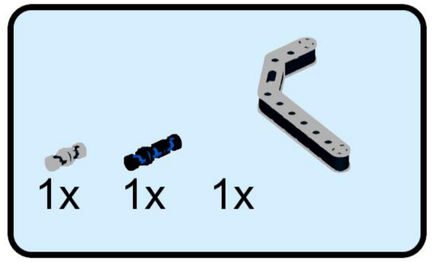

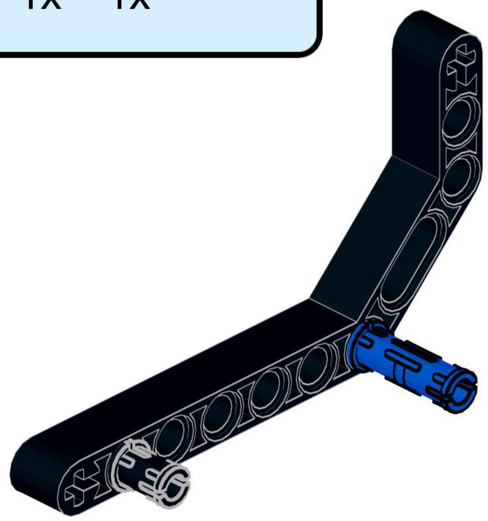

11

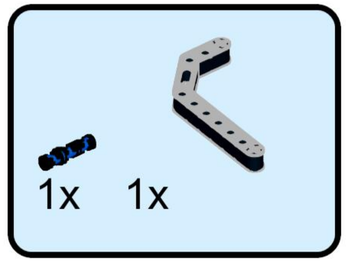

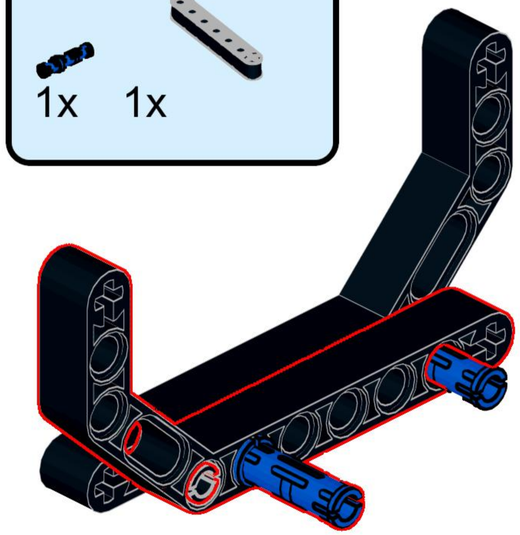

12

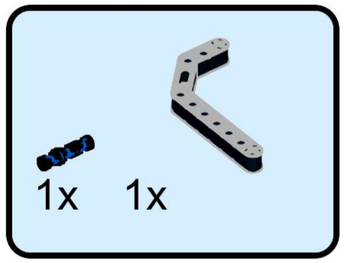

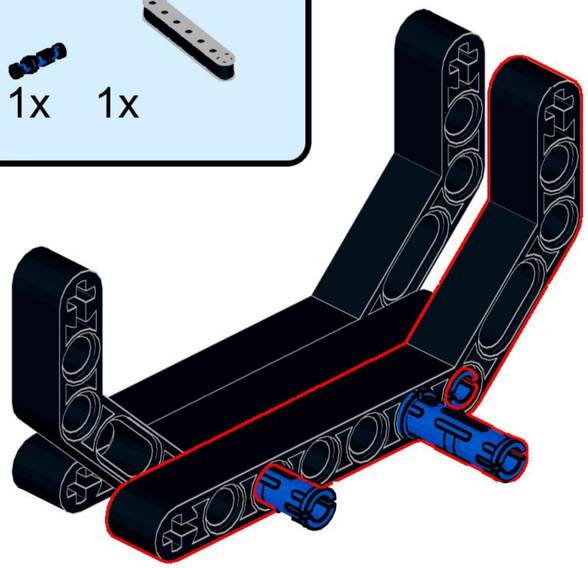

13

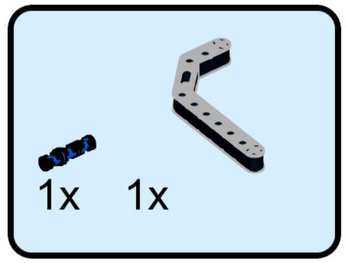

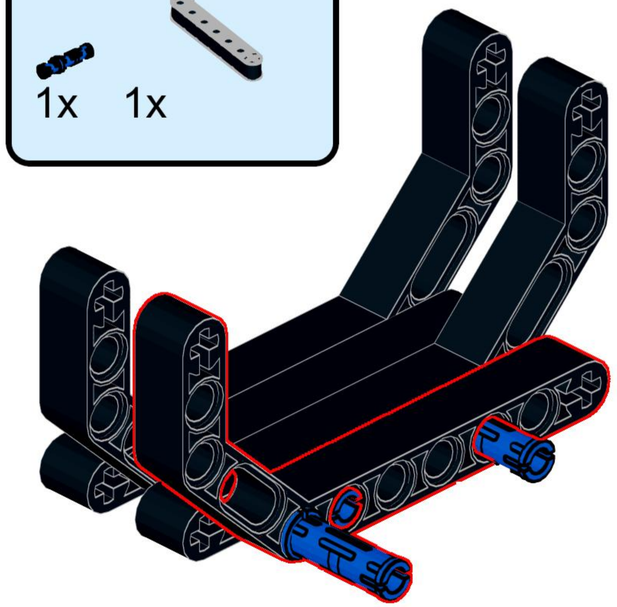

14

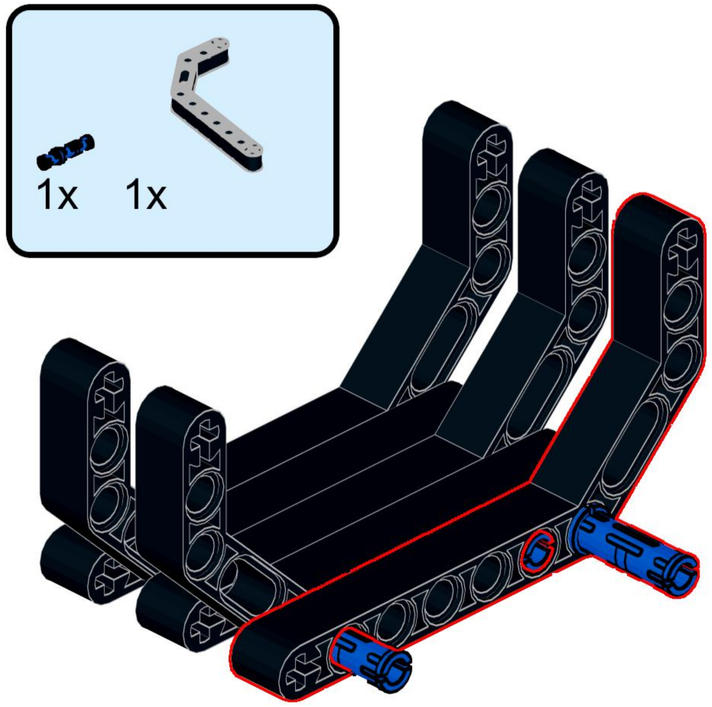

15

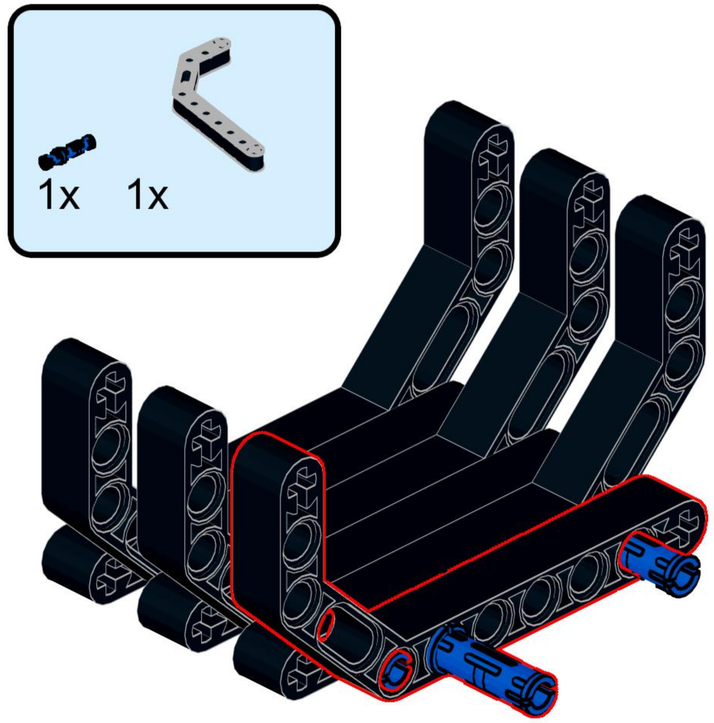

16

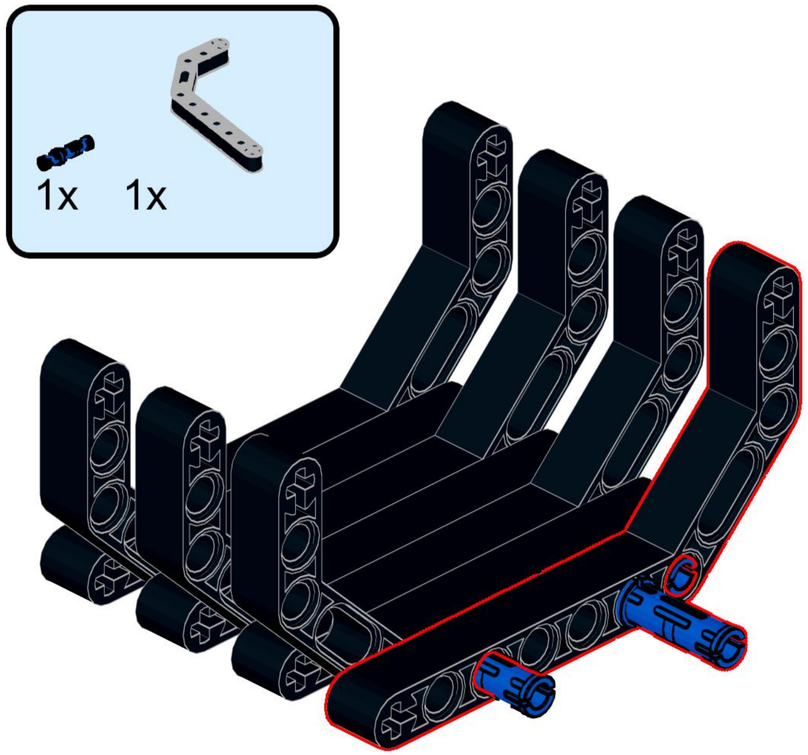

17

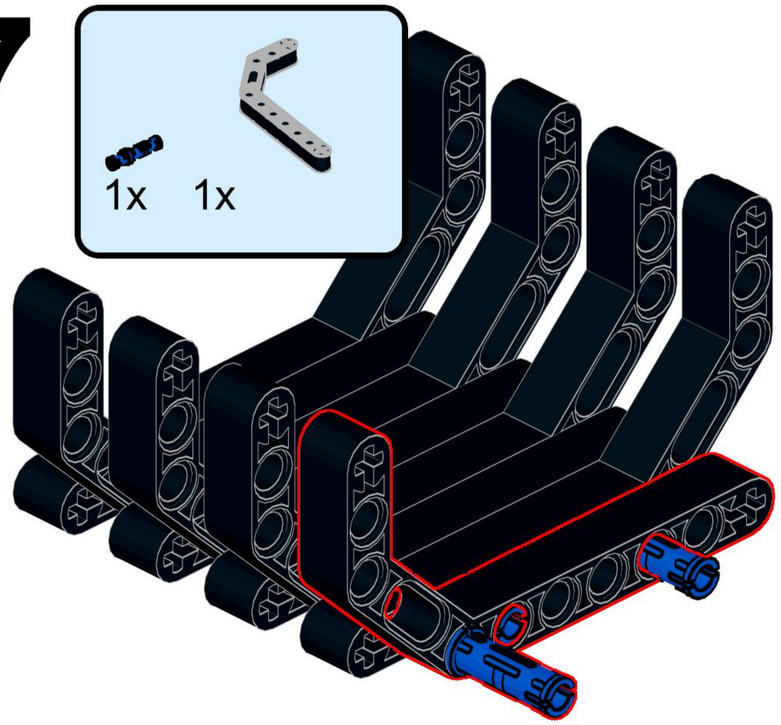

18

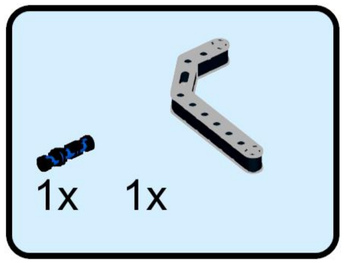

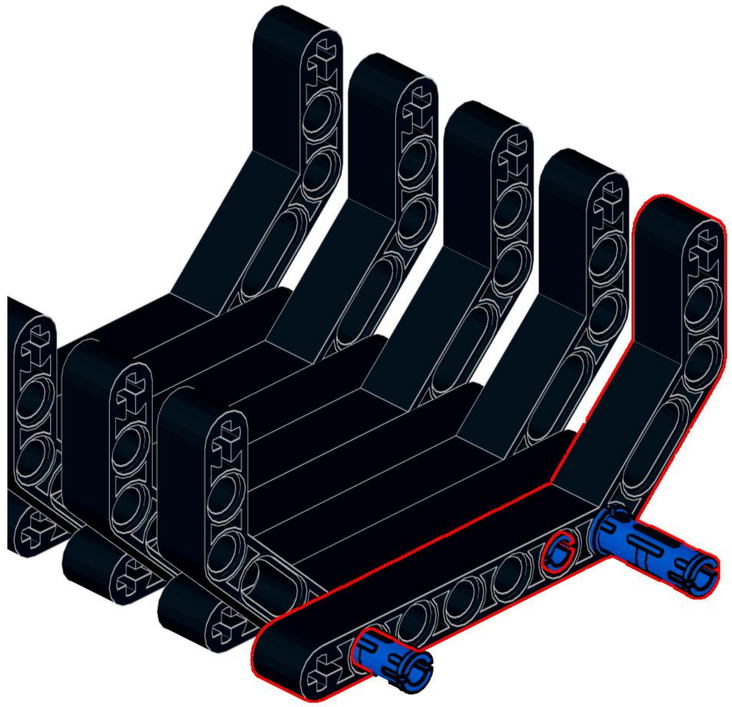

19

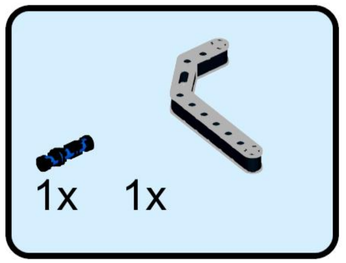

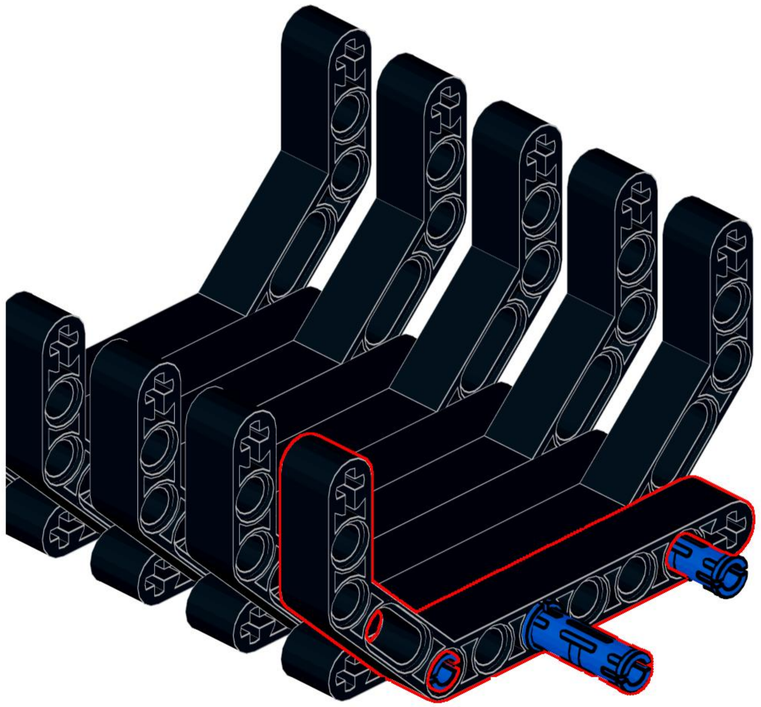

20

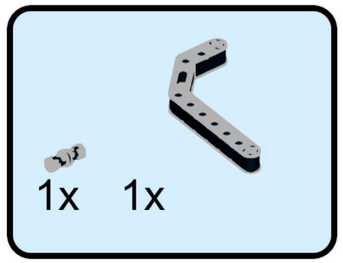

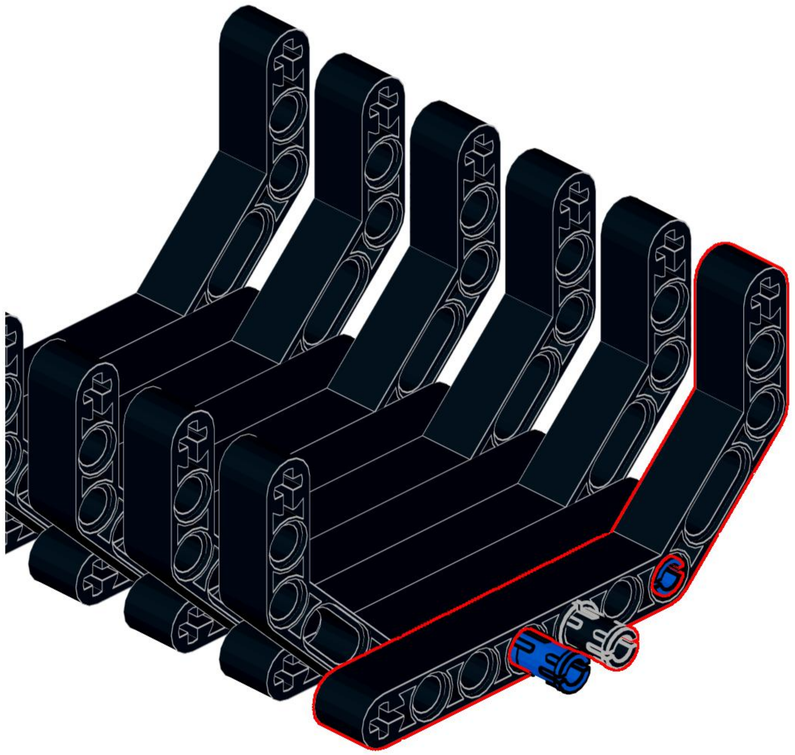

21

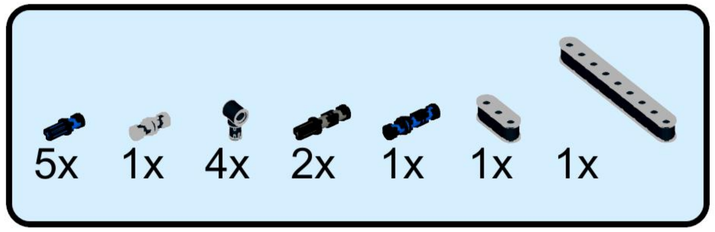

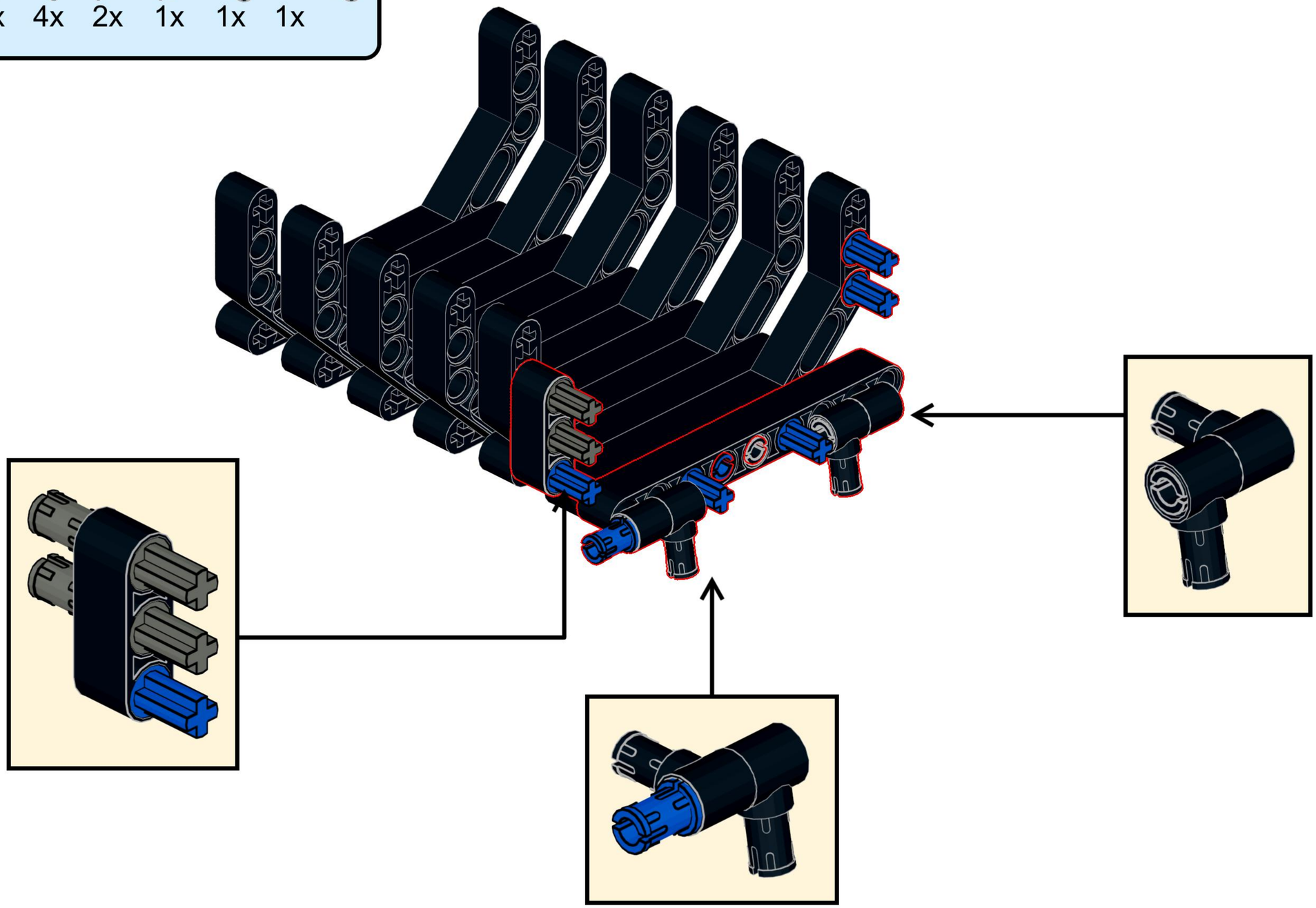

22

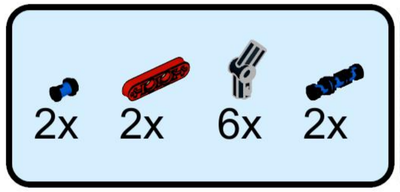

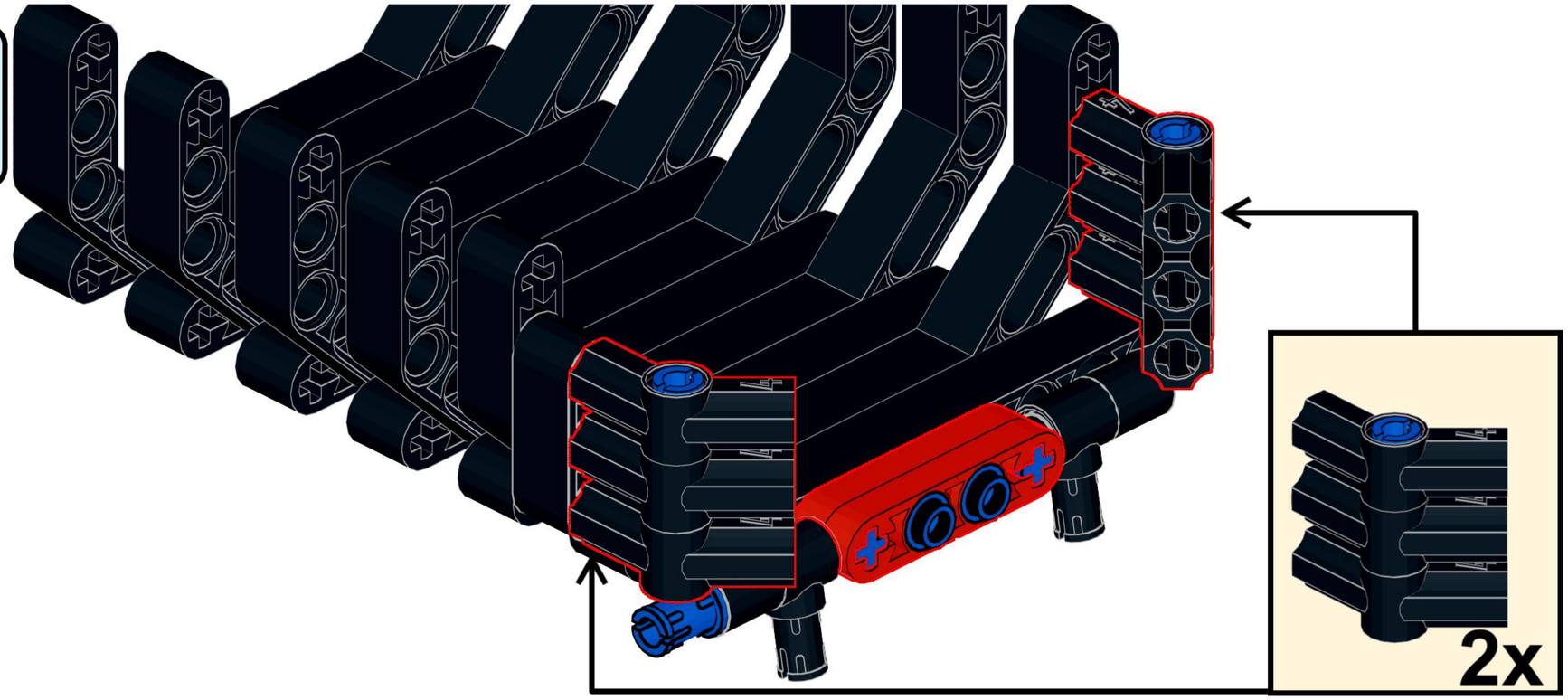

23

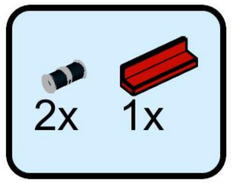

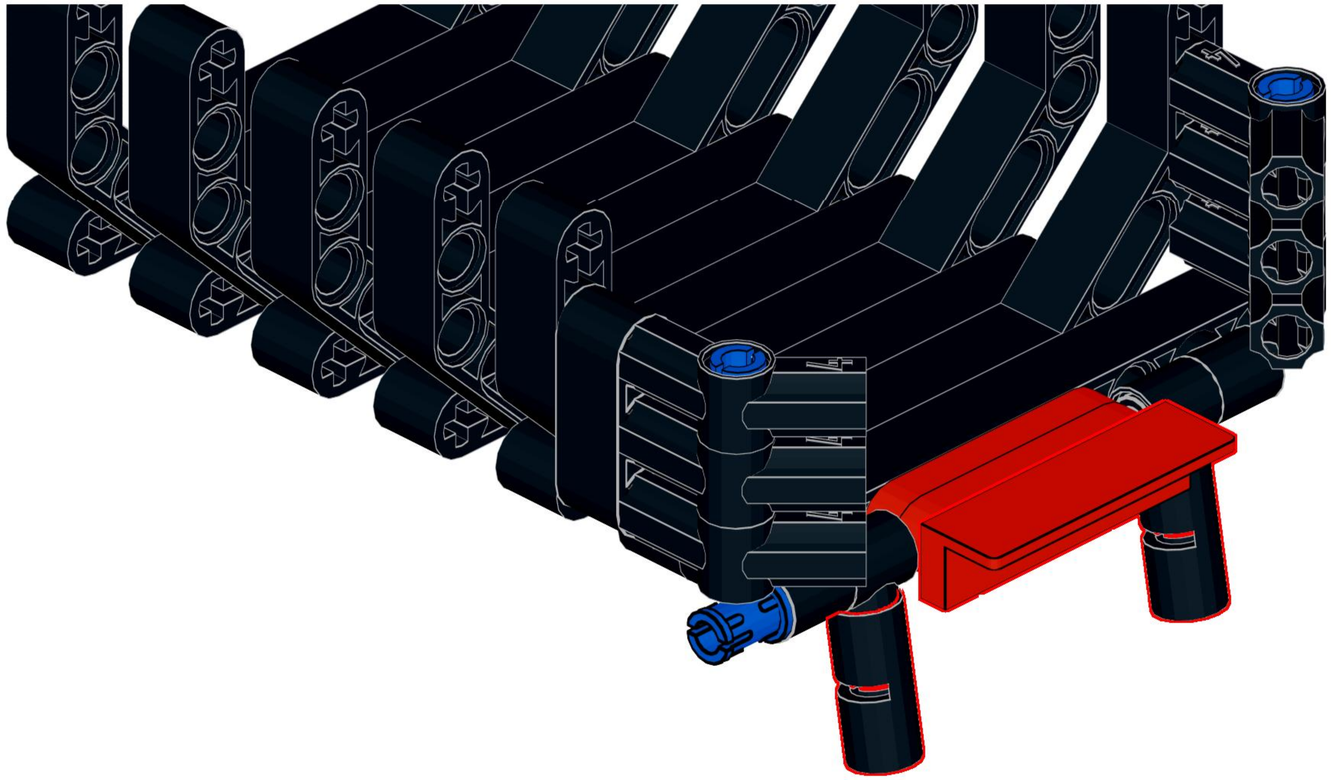

24

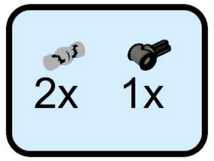

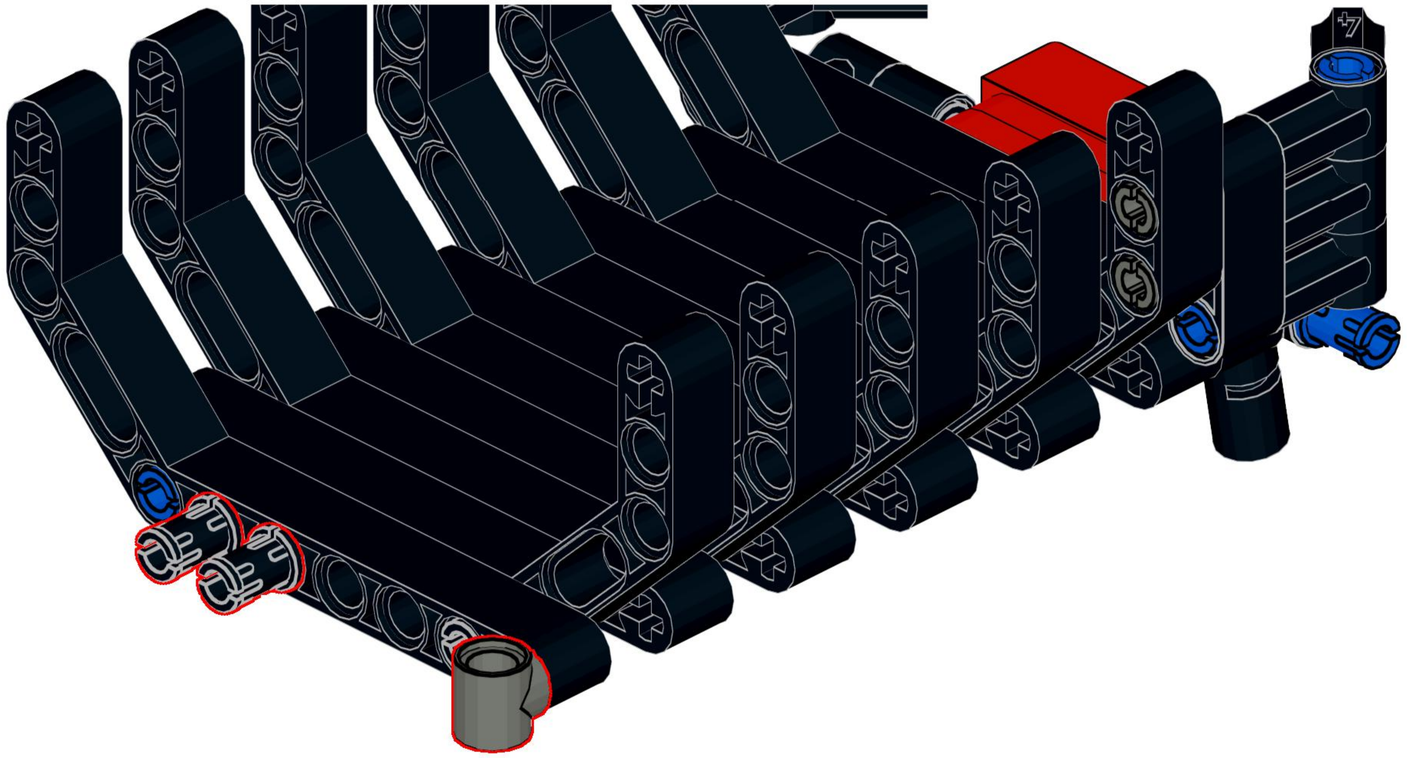

25

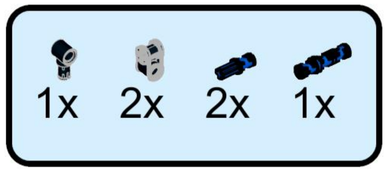

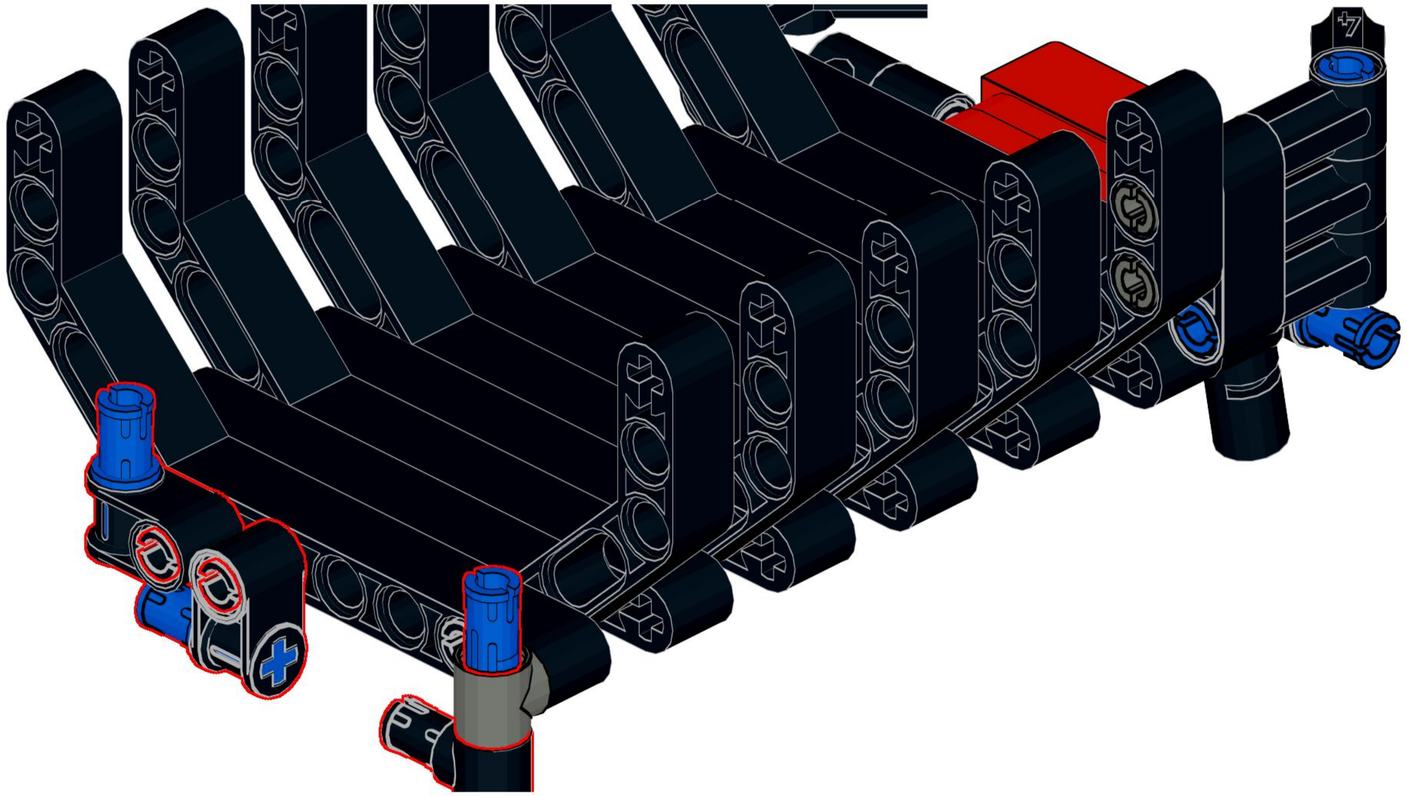

26

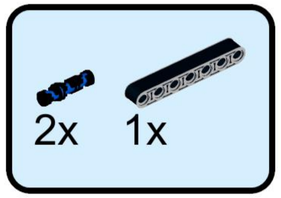

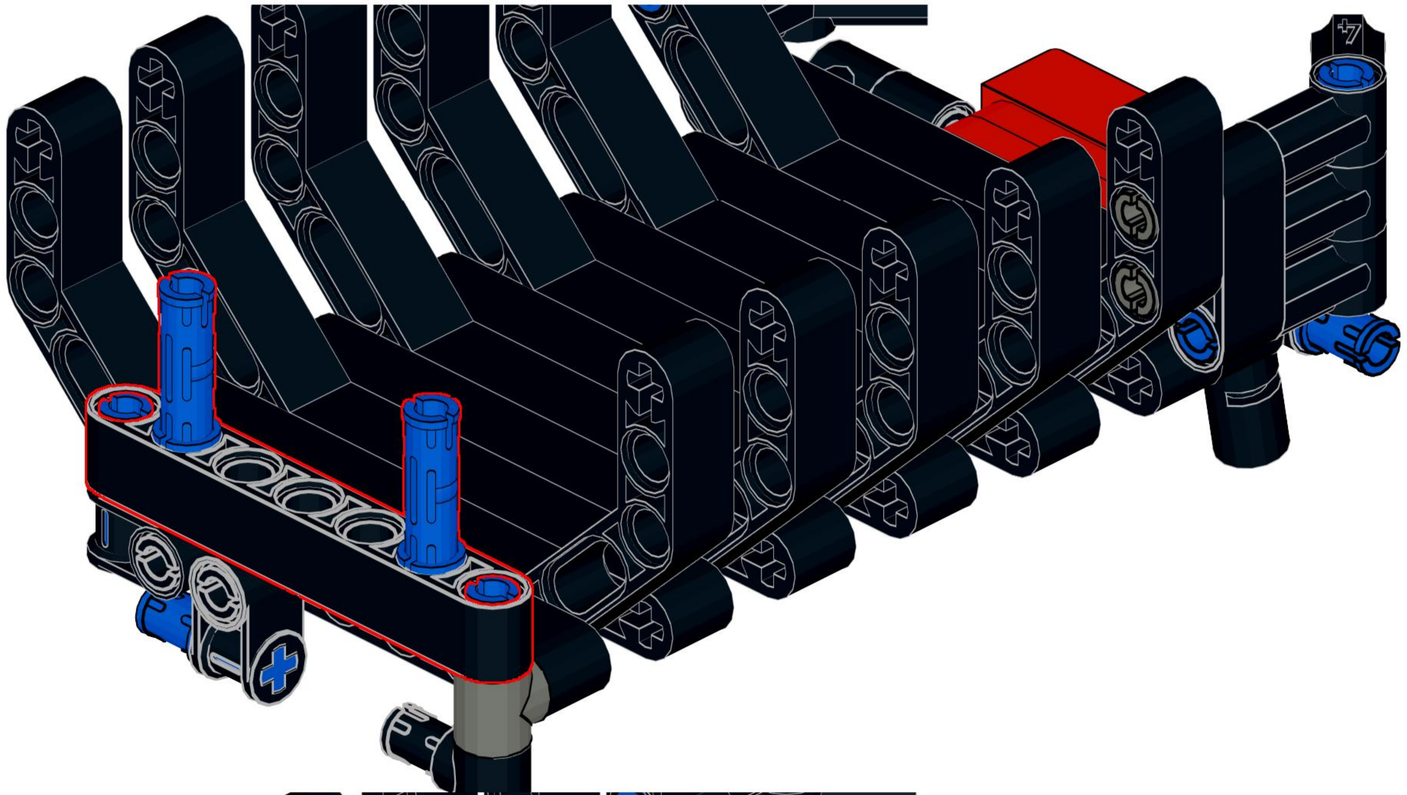

27

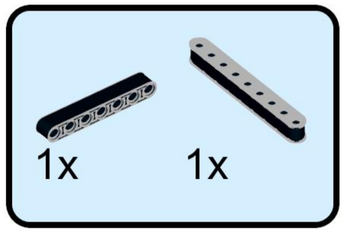

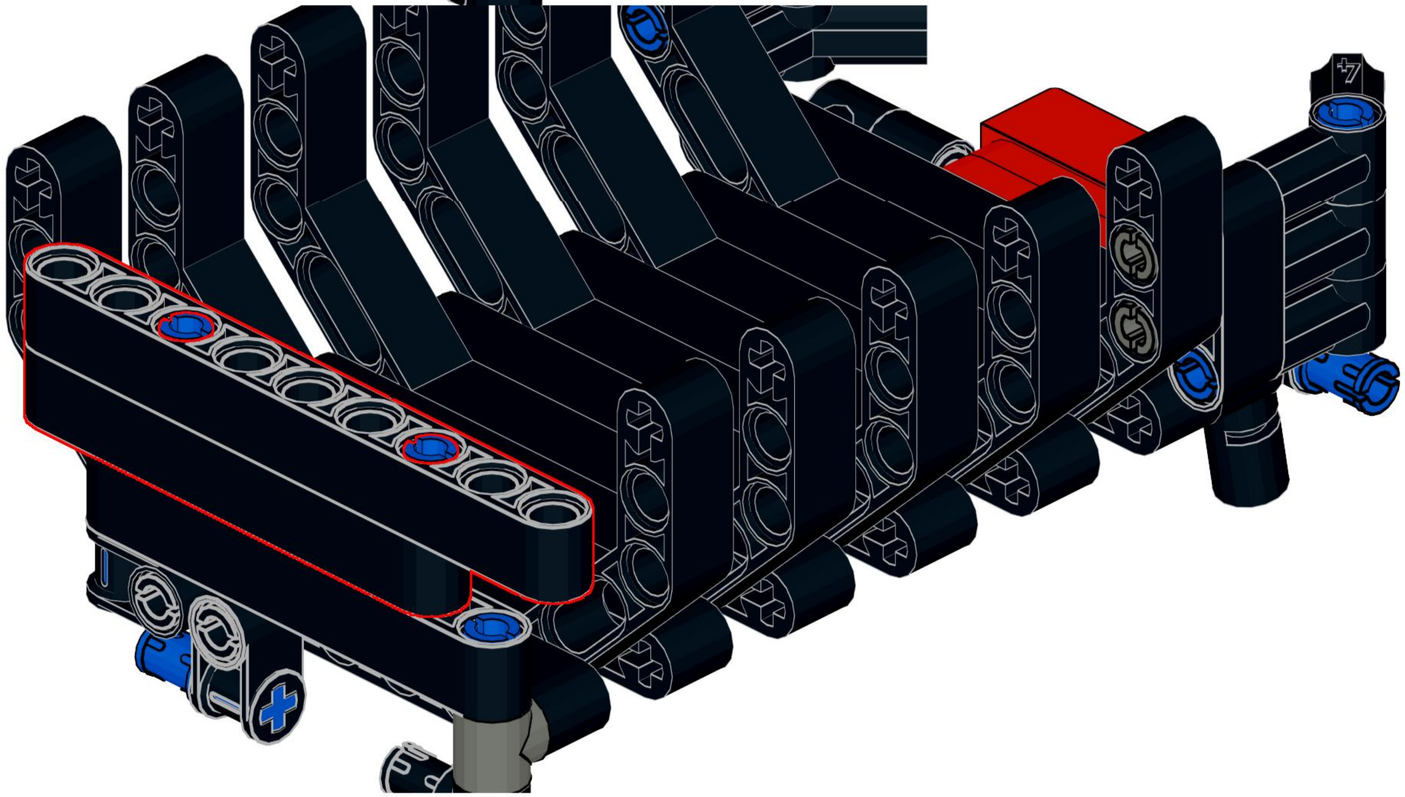

28

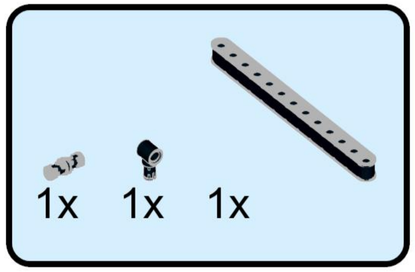

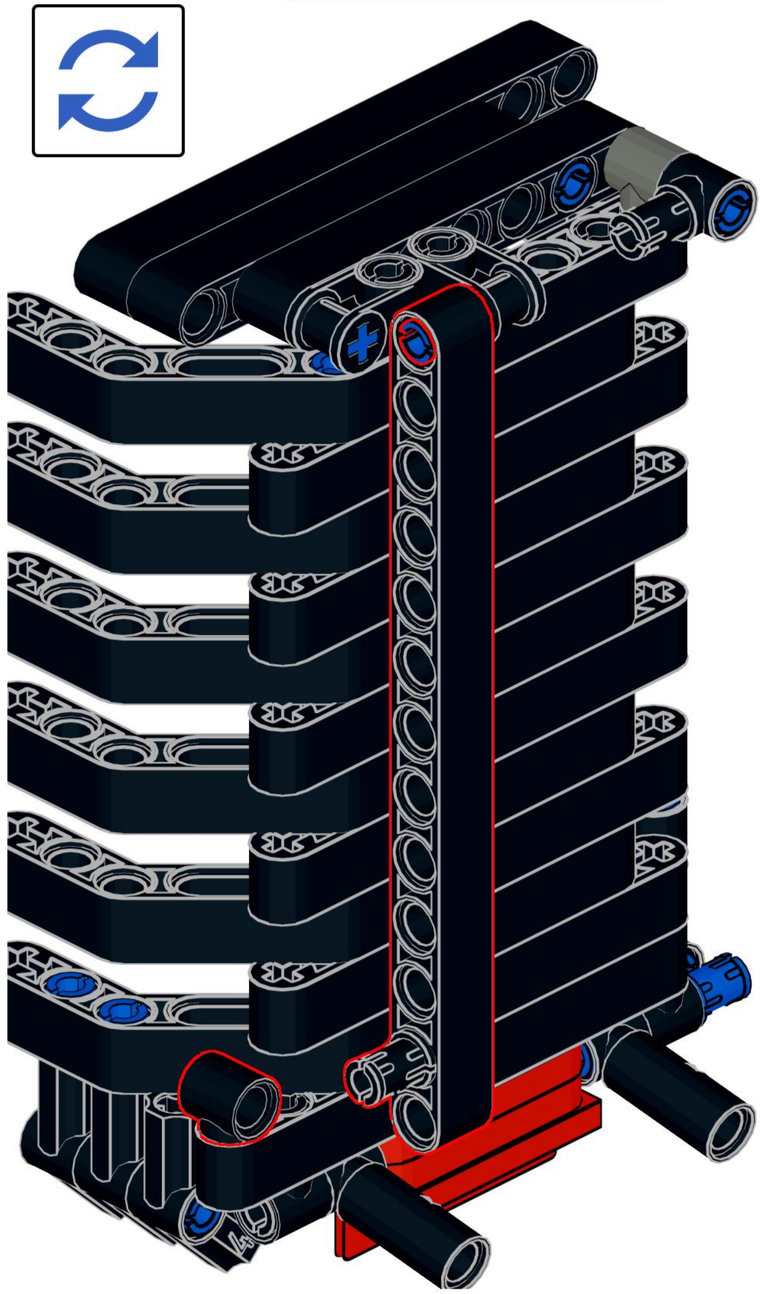

29

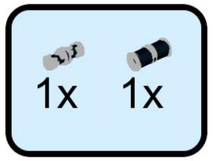

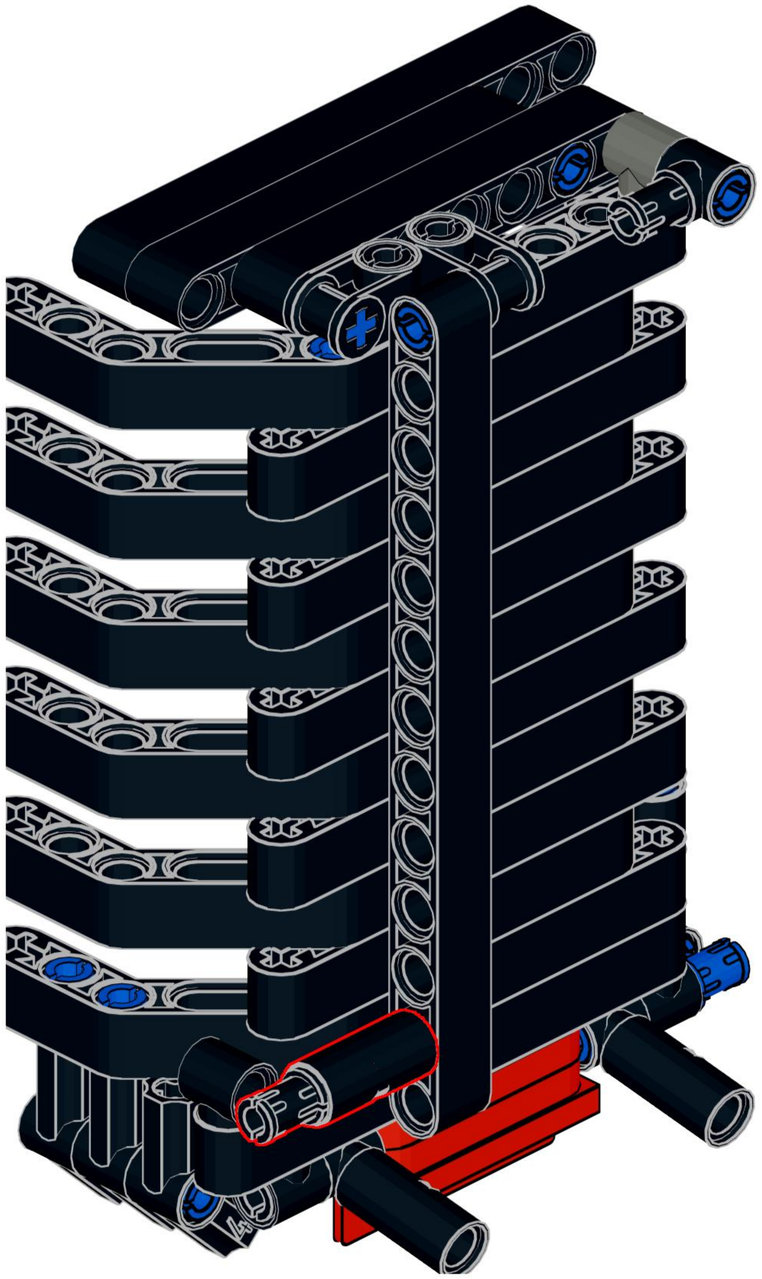

30

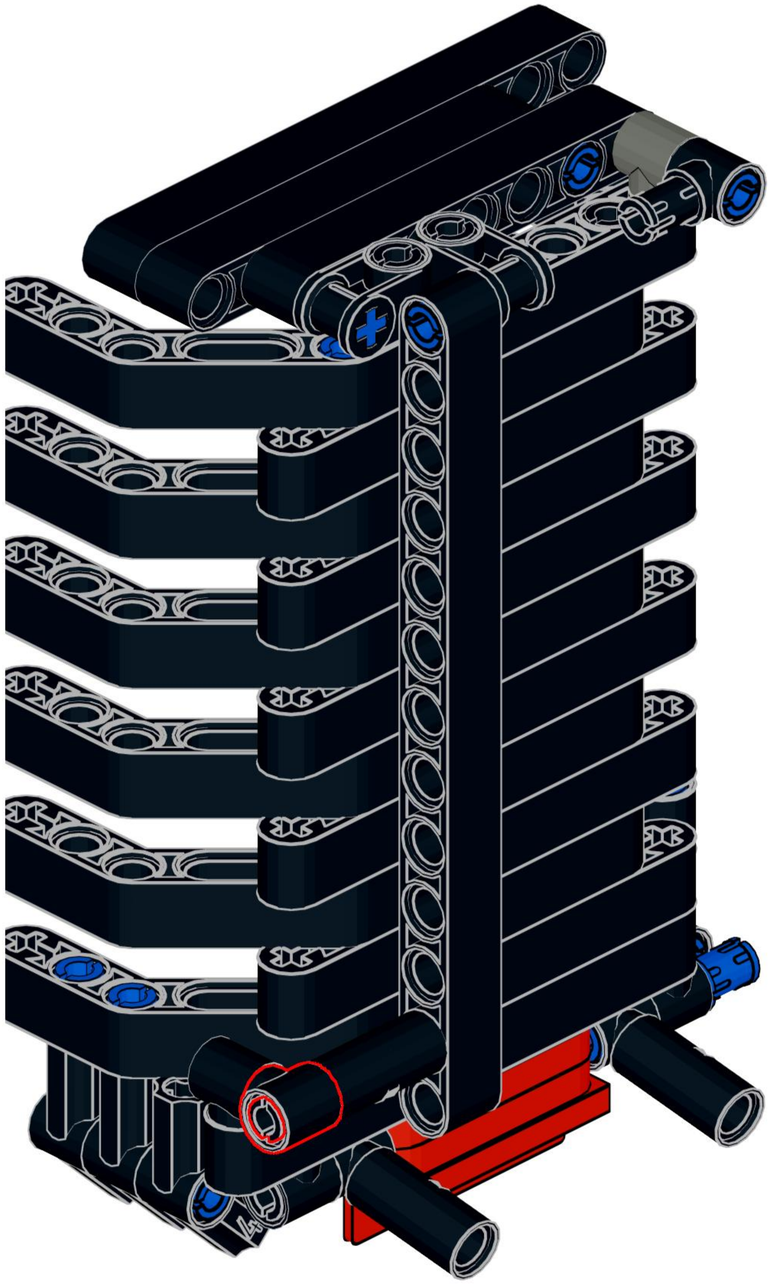

31

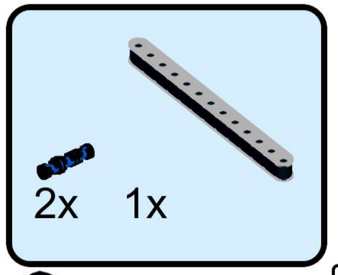

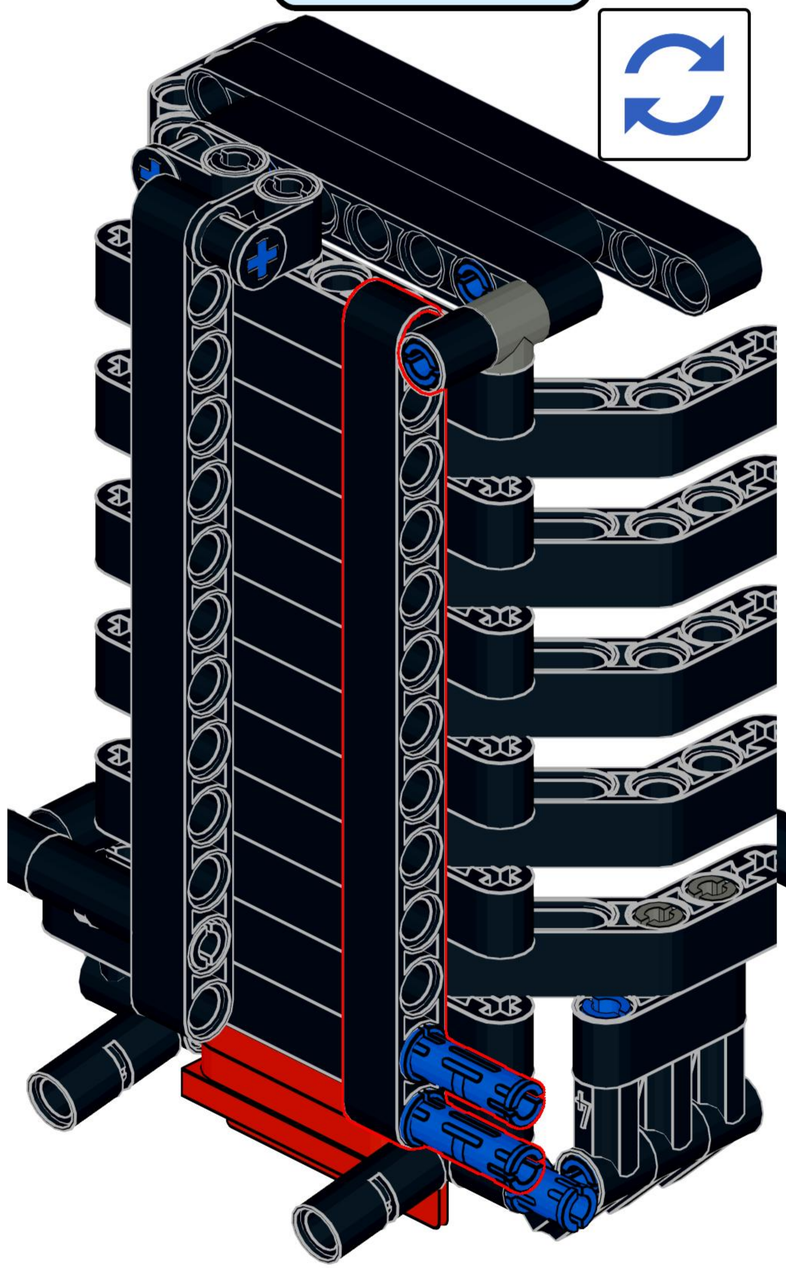

32

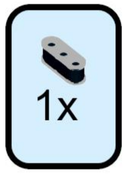

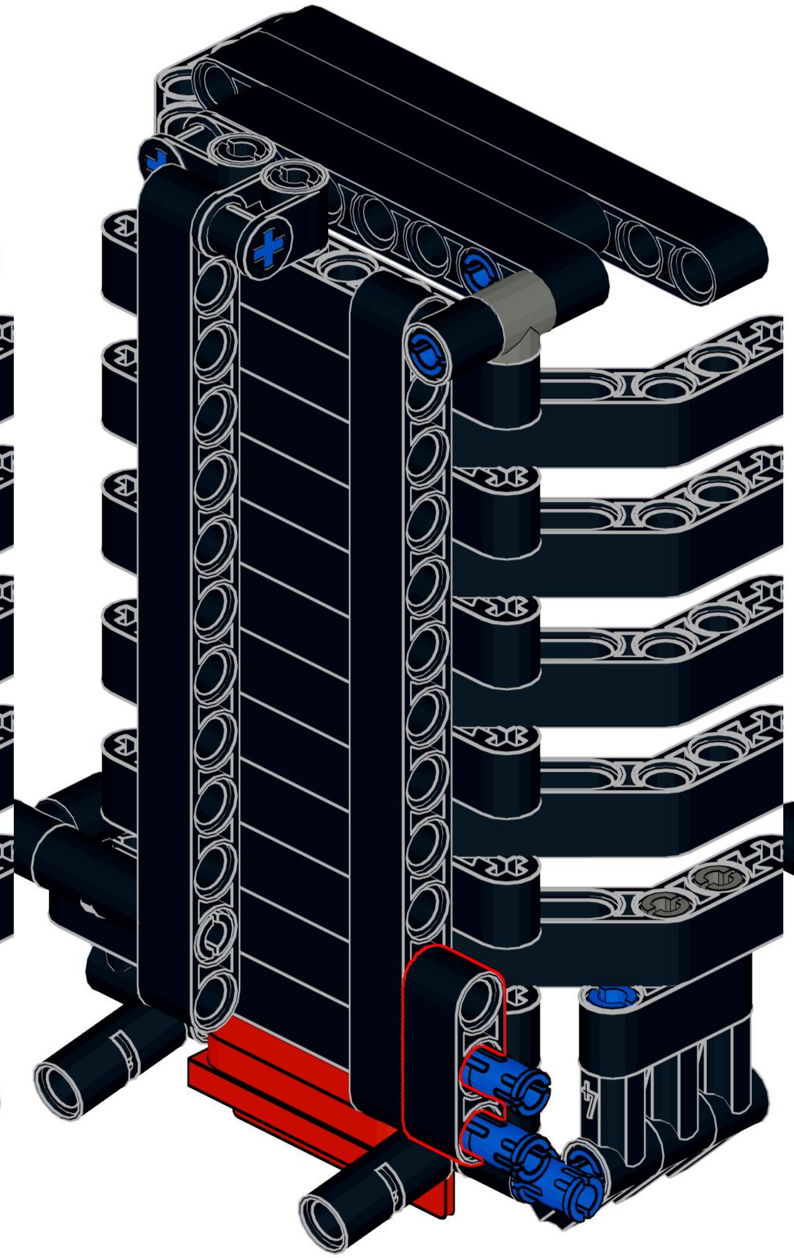

33

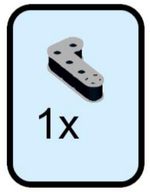

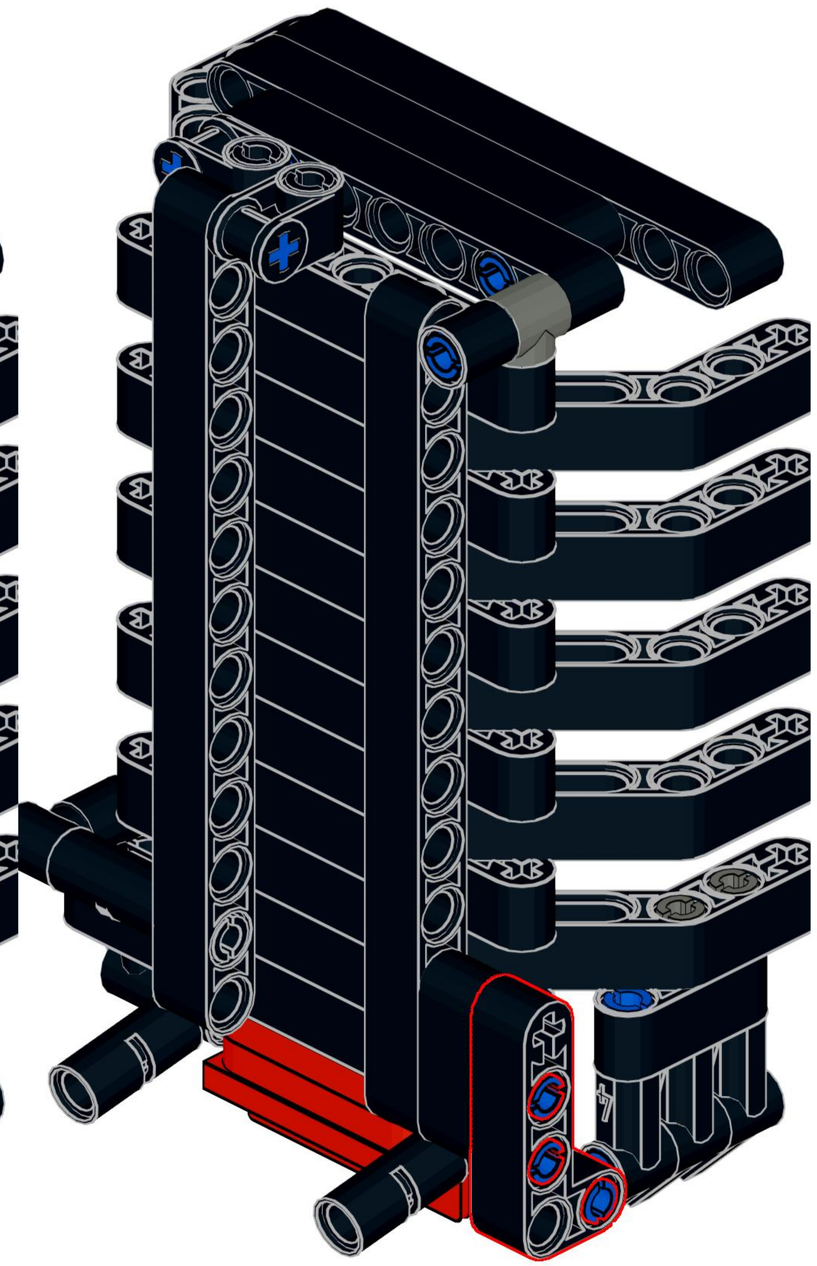

34

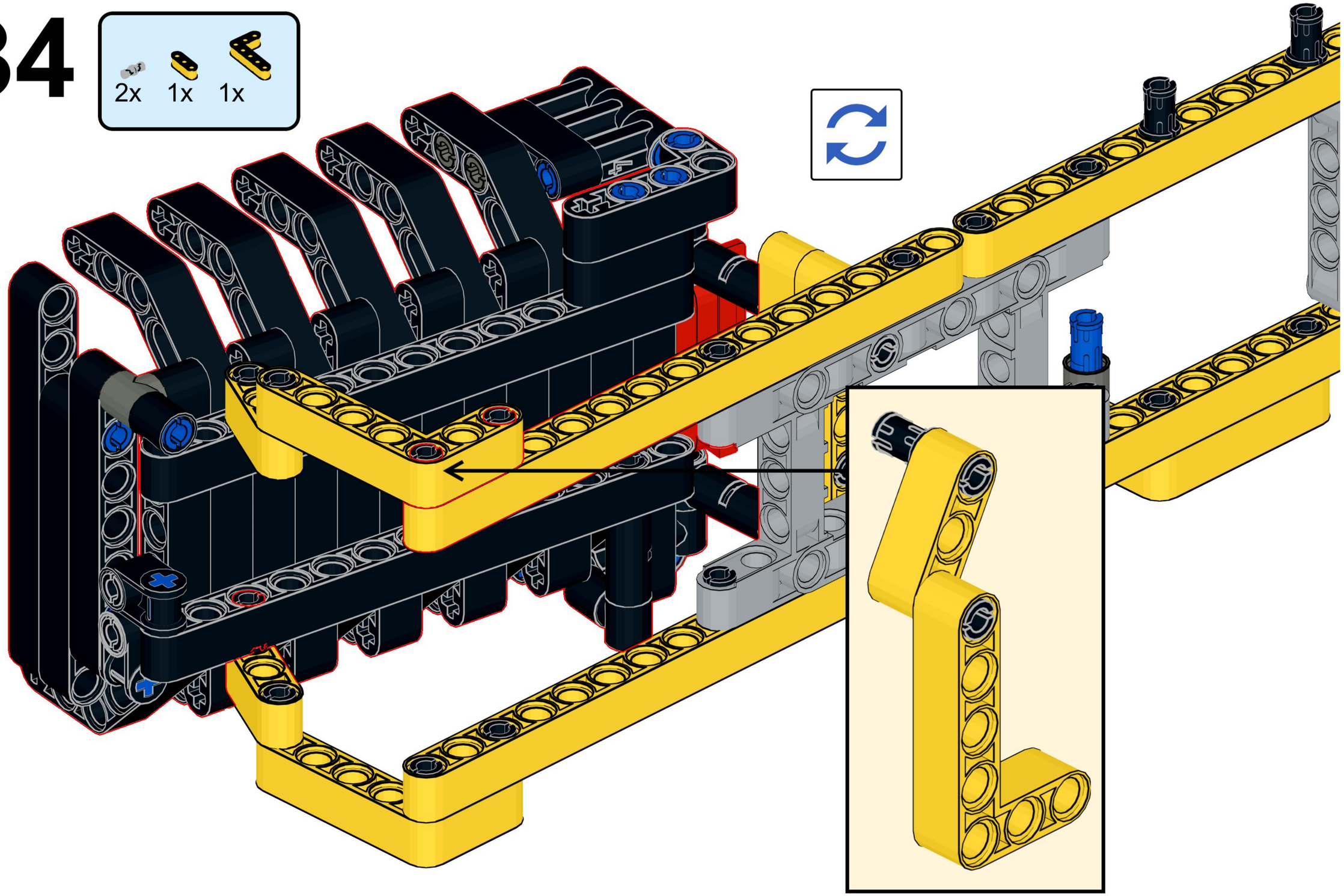

35

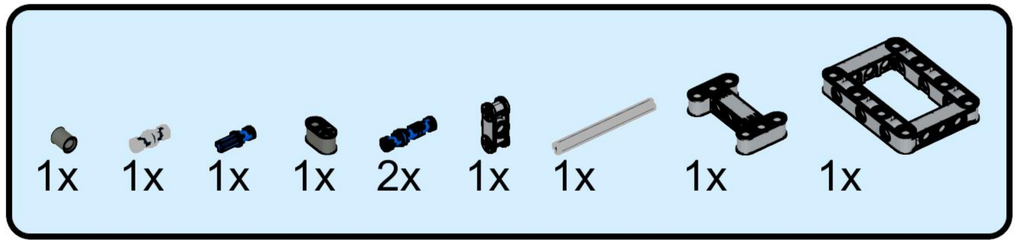

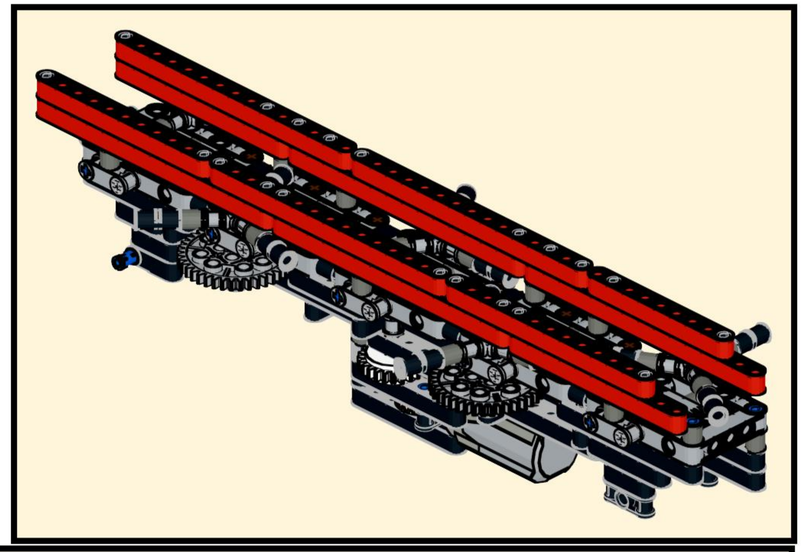

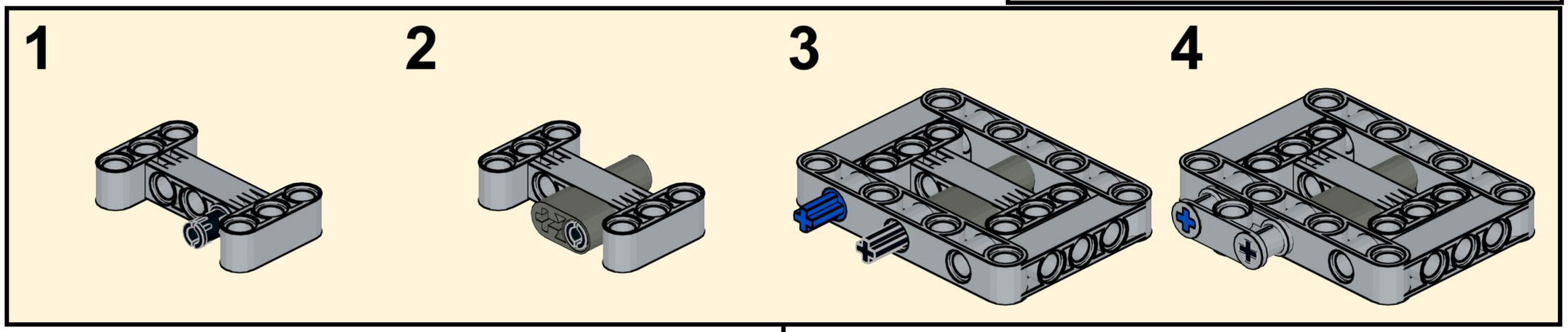

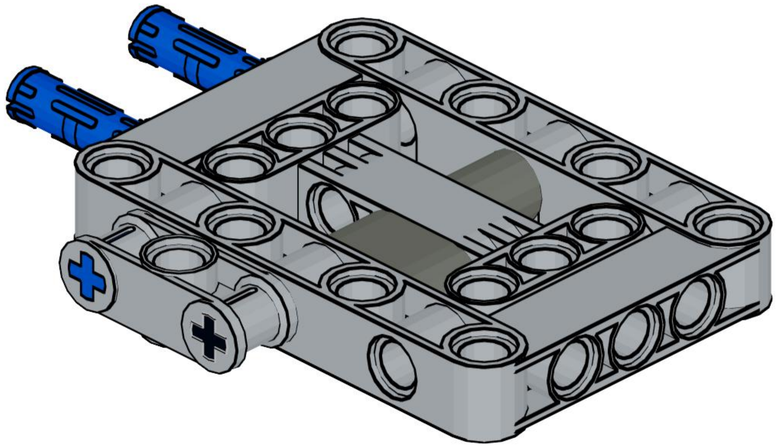

36

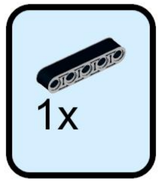

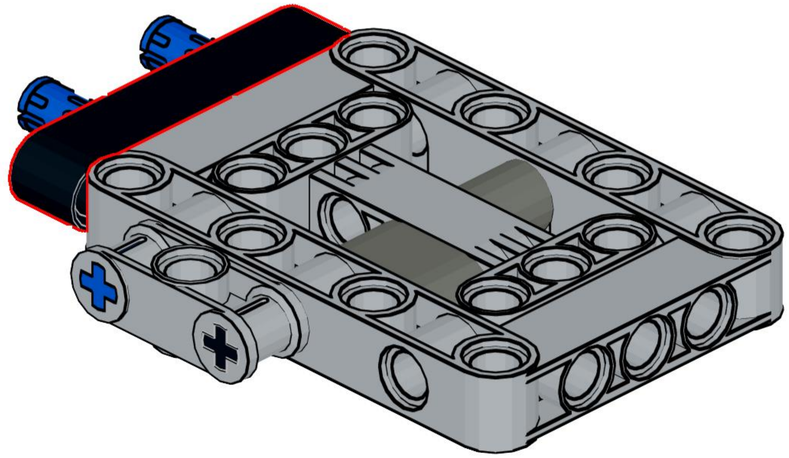

37

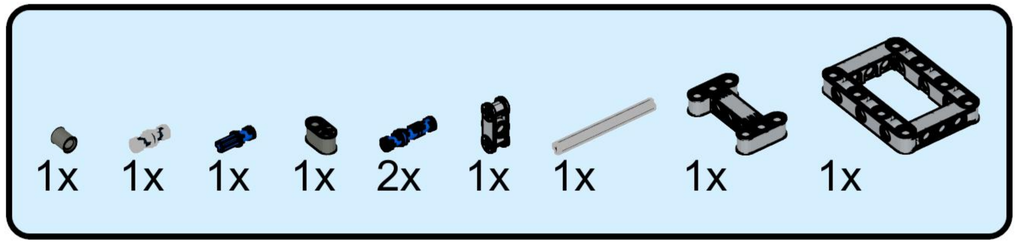

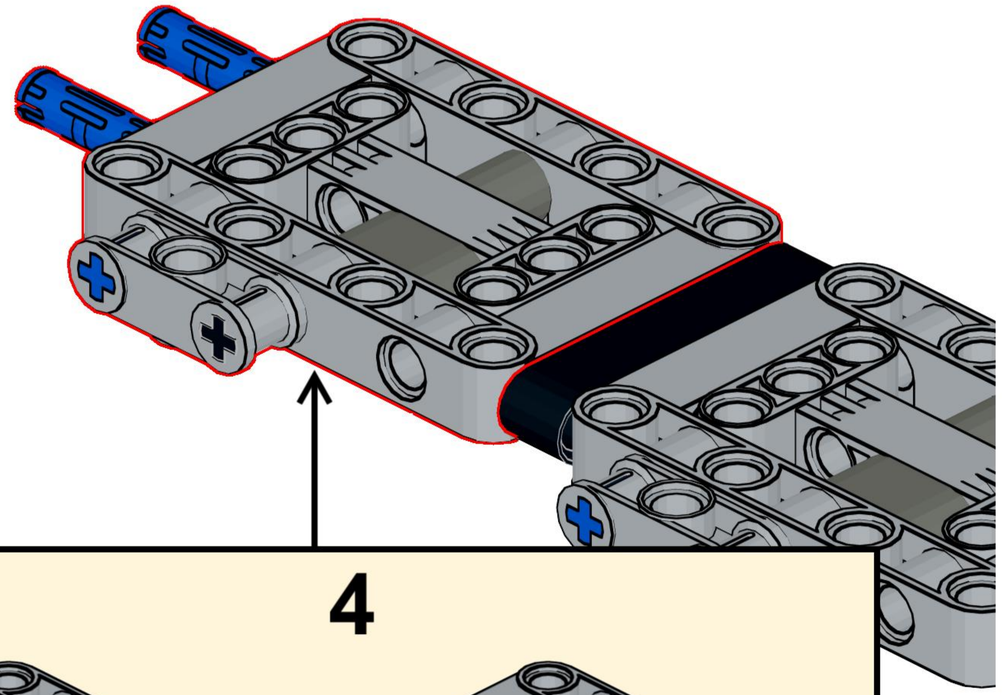

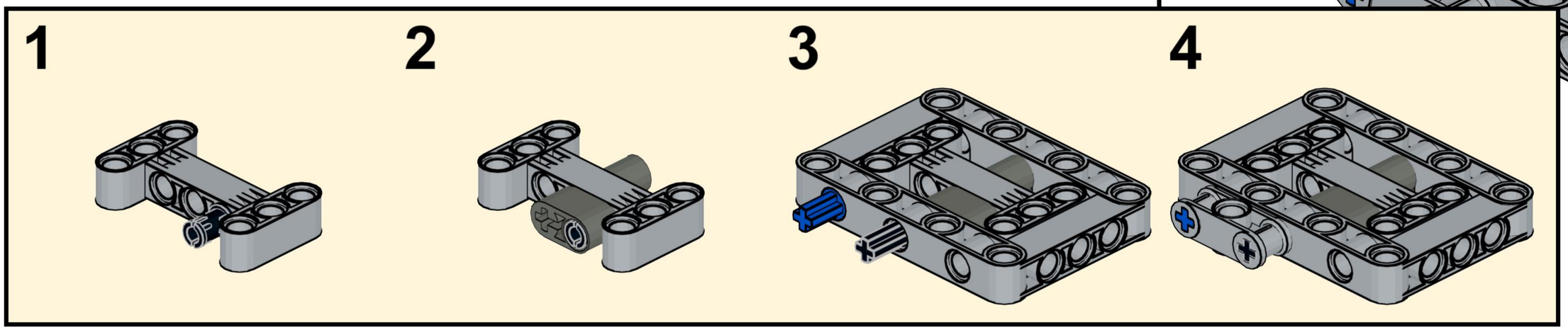

38

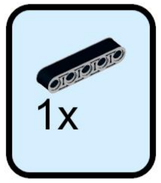

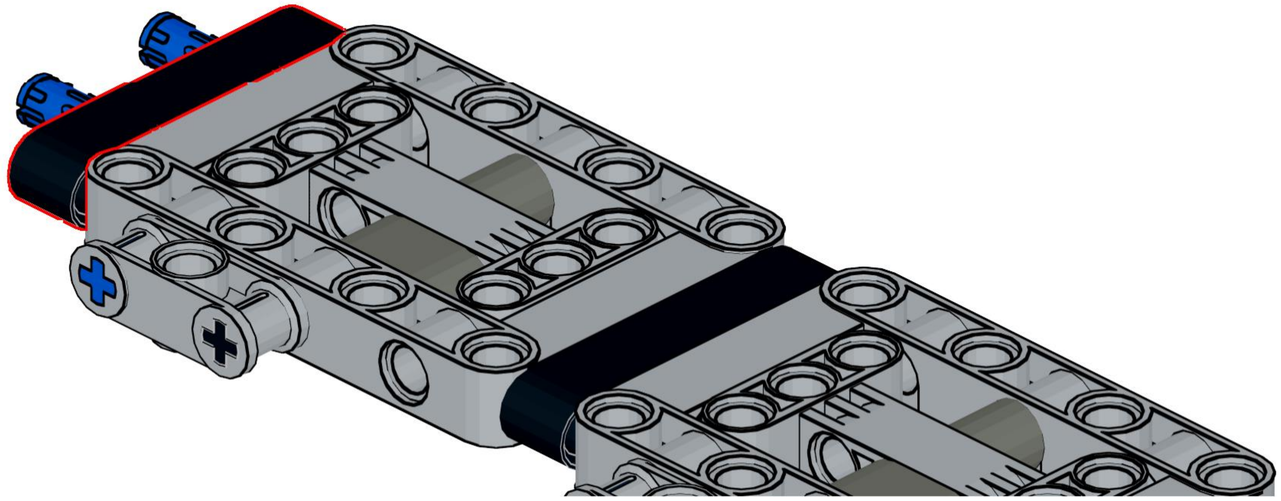

39

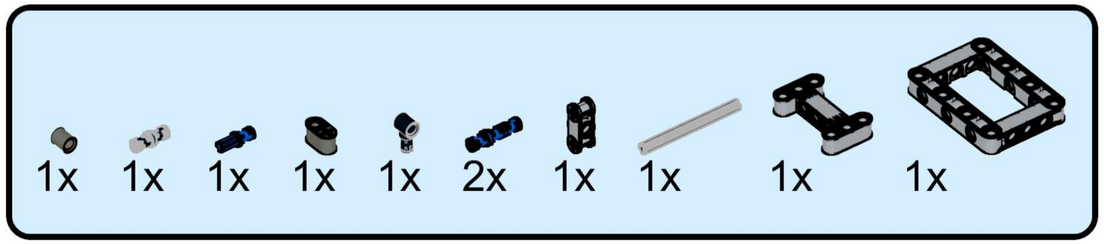

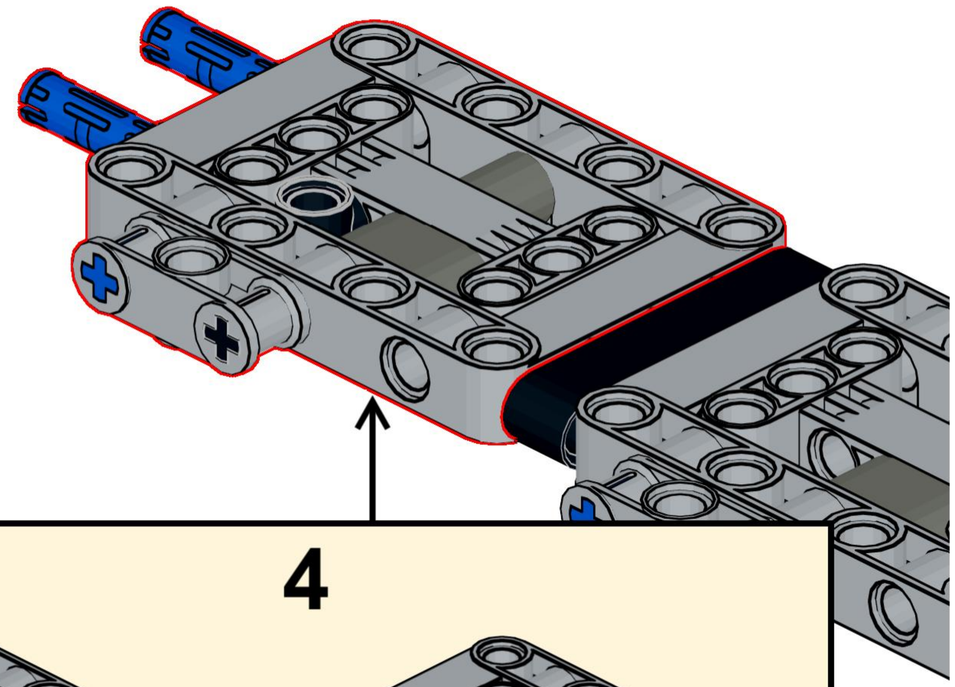

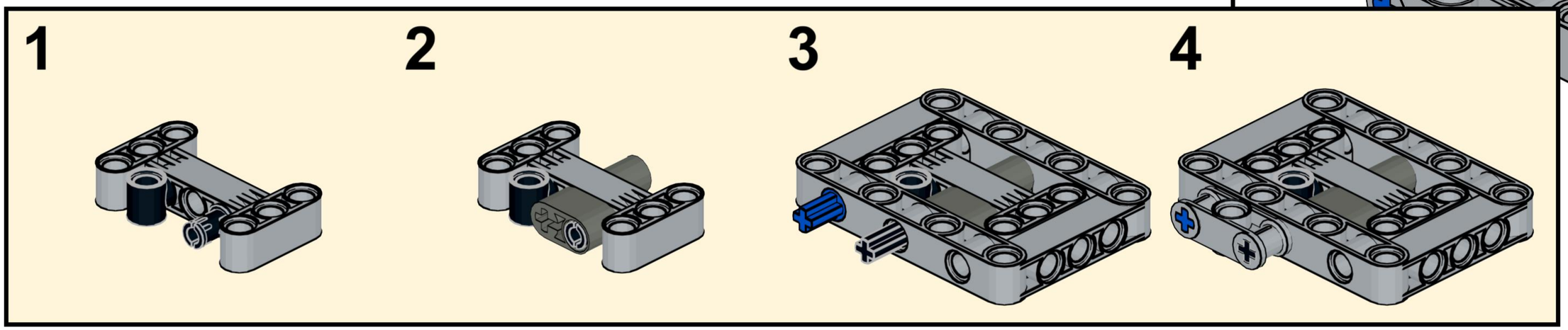

40

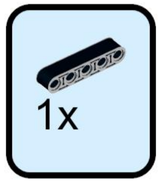

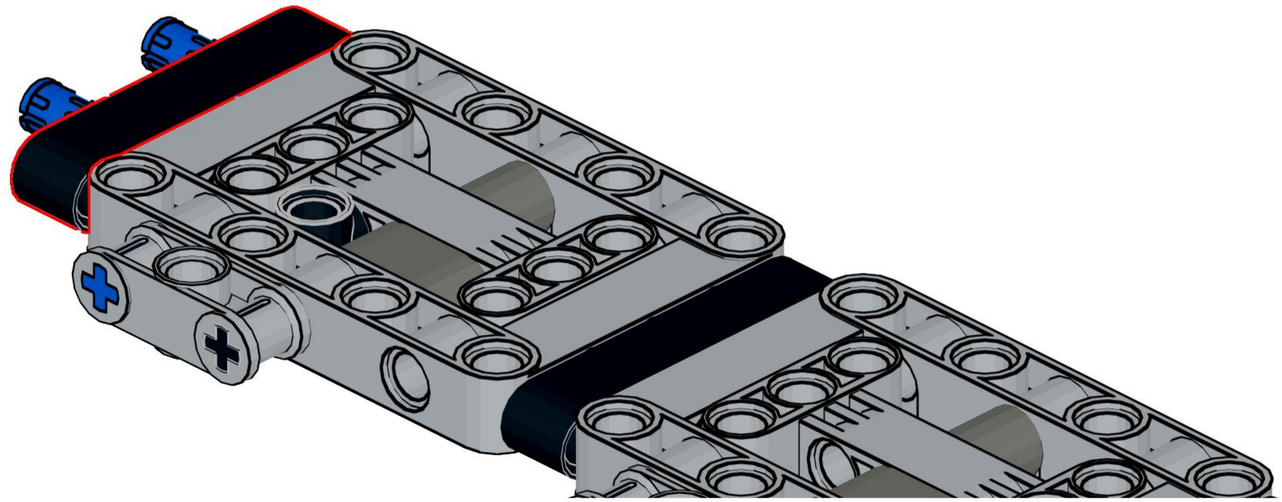

41

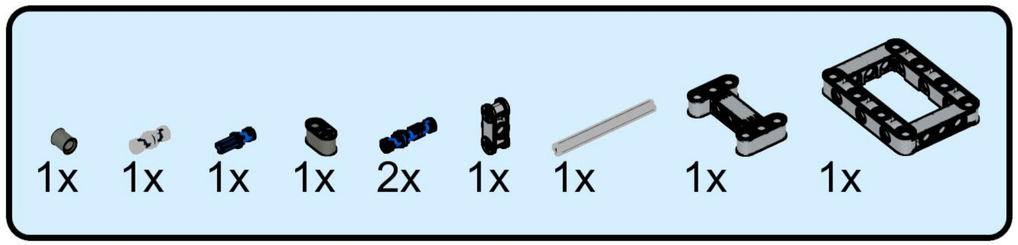

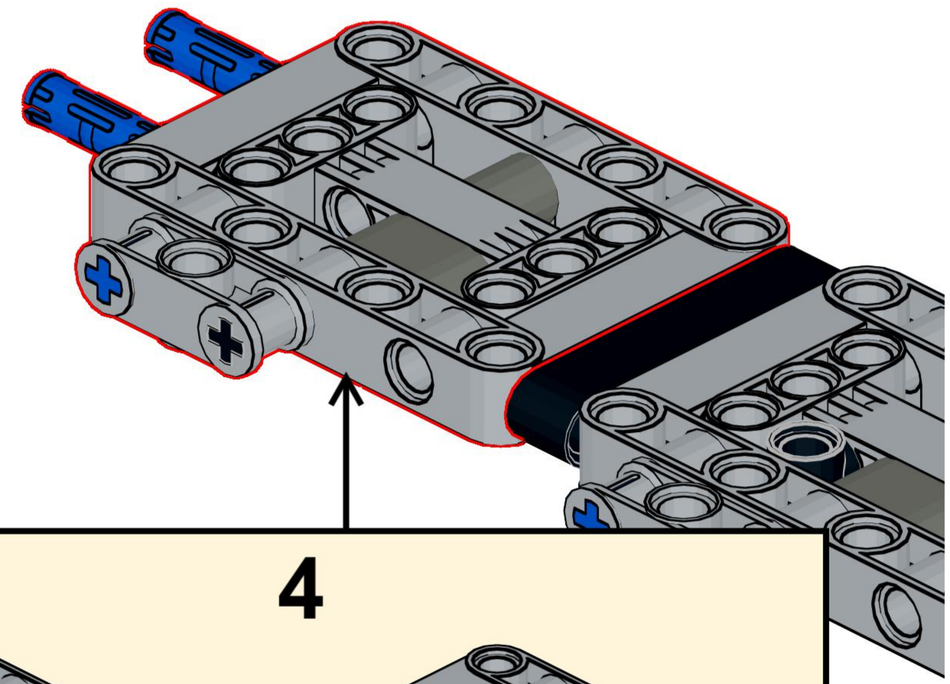

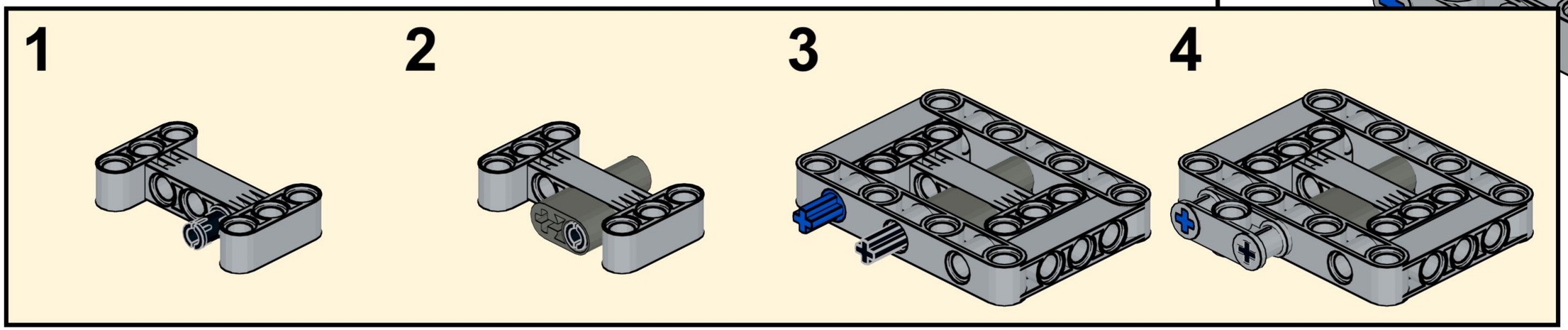

42

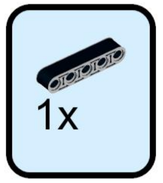

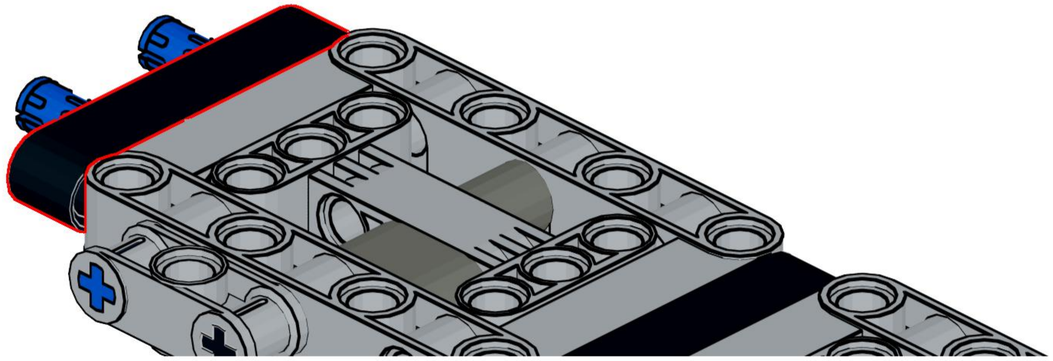

43

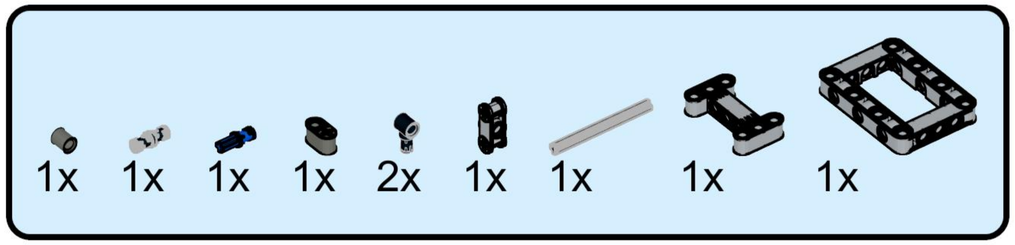

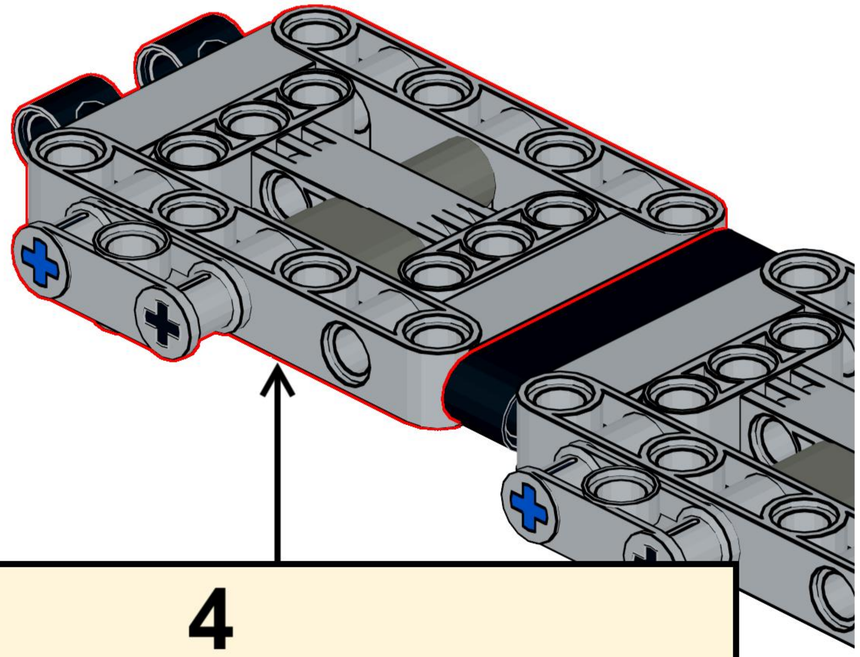

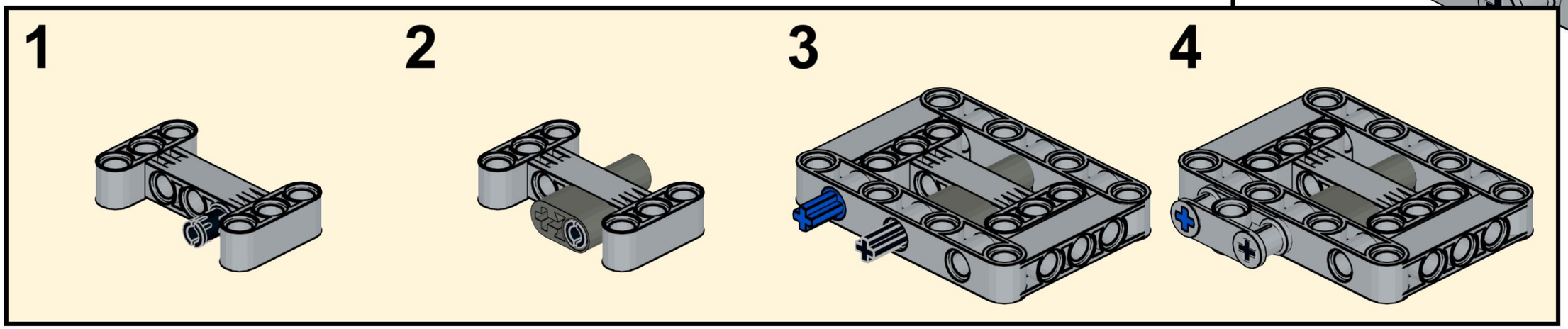

44

8x

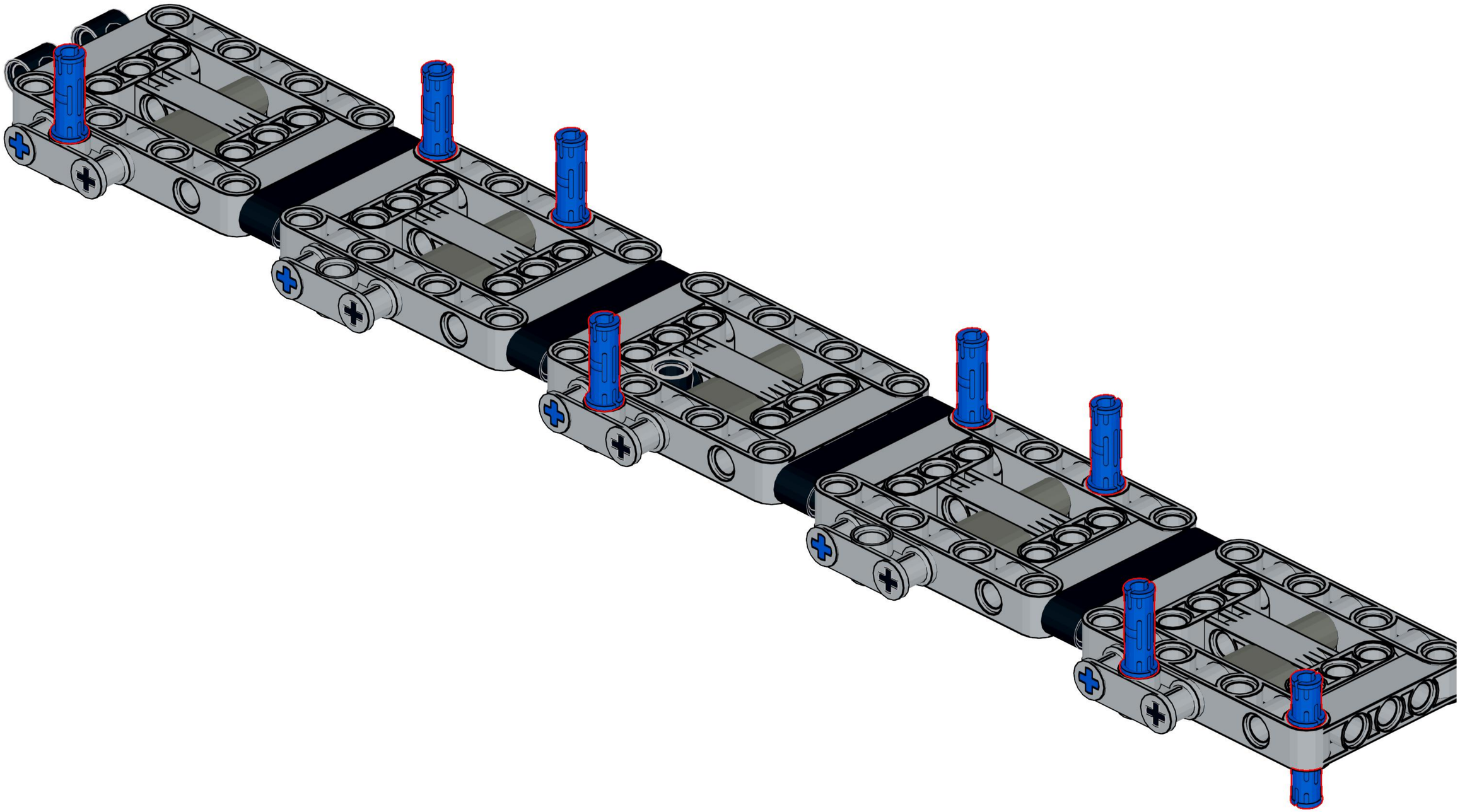

45

8x

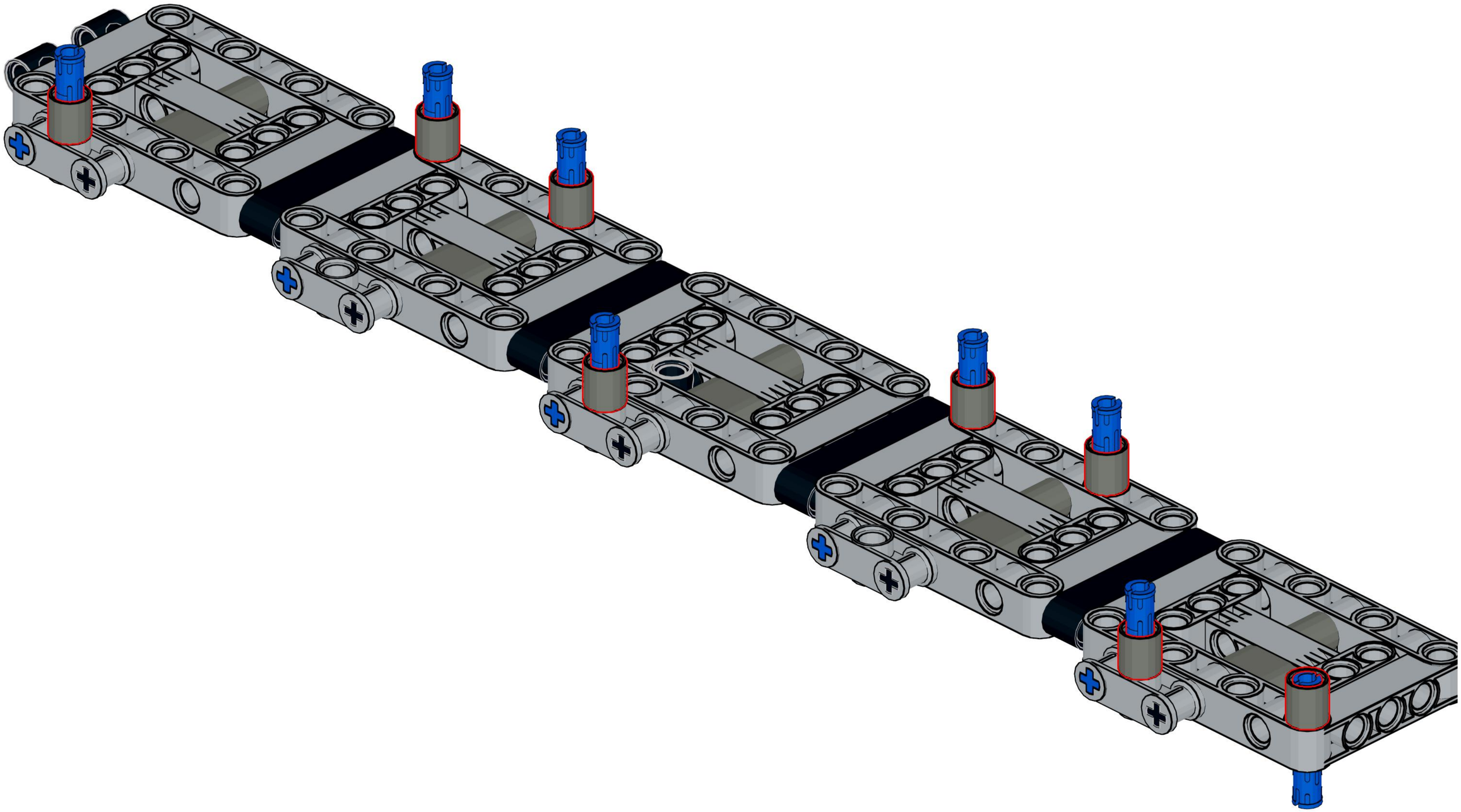

46

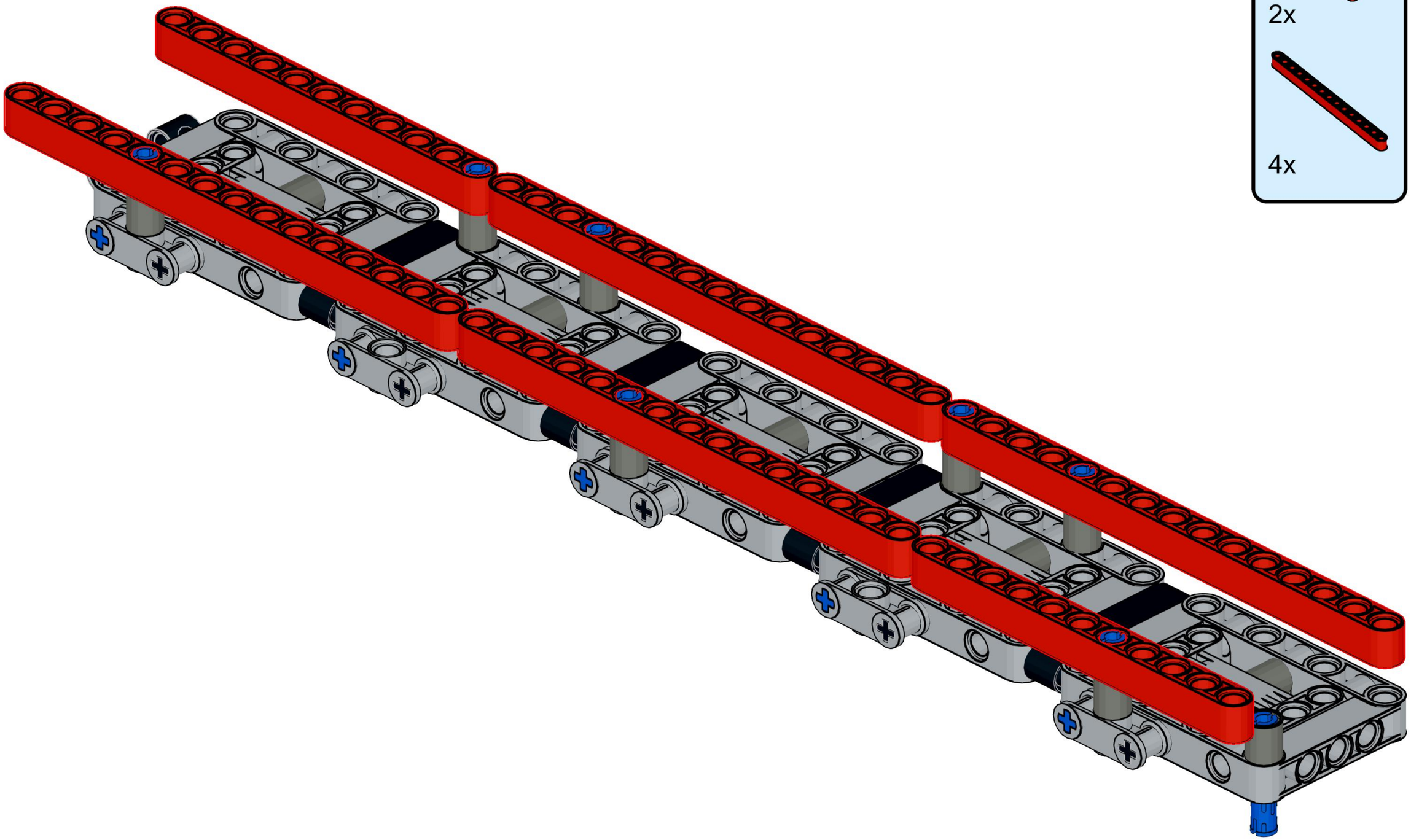

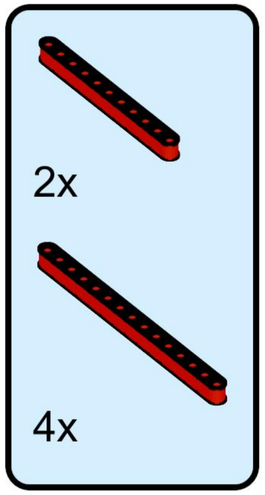

47

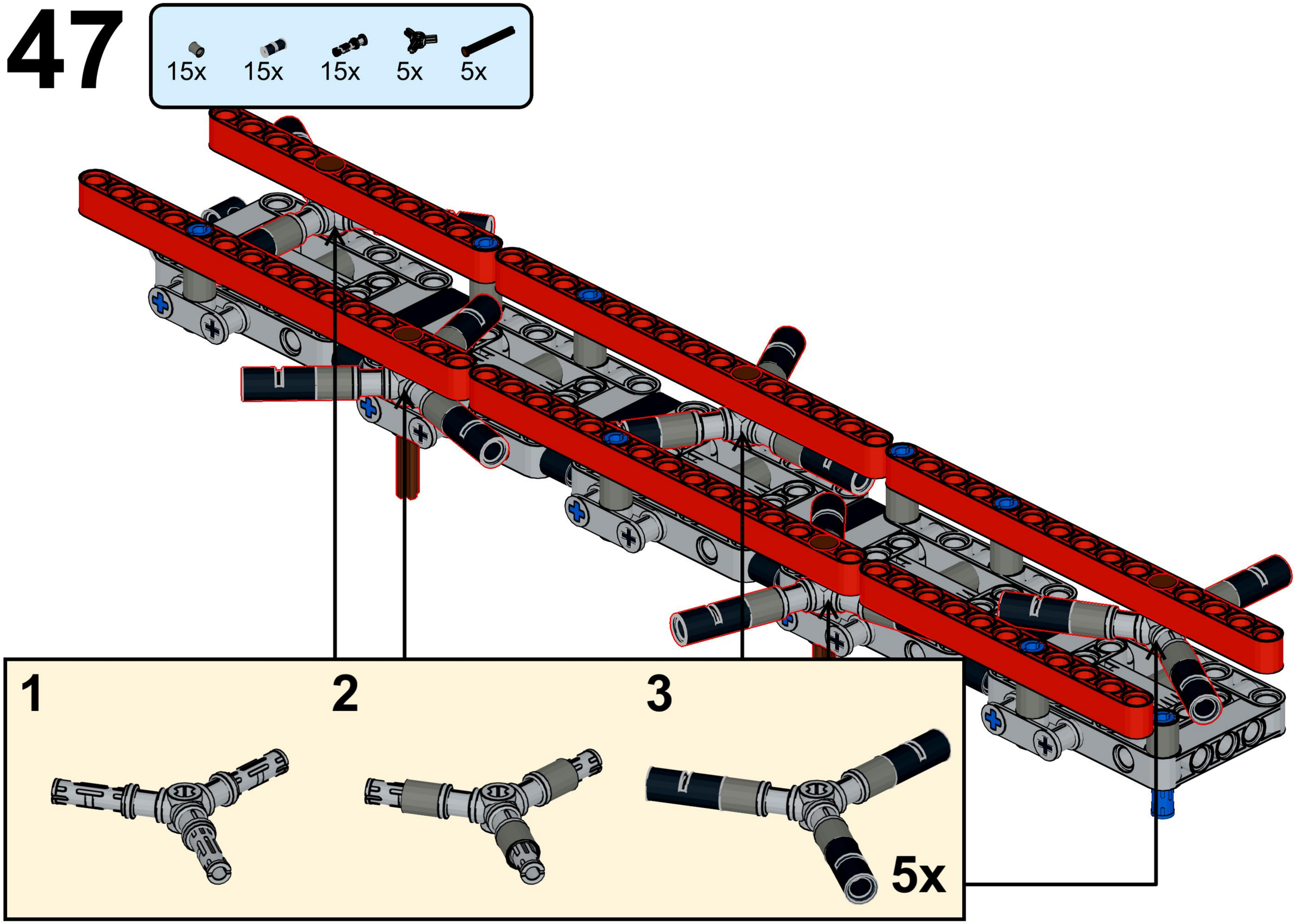

48

20x

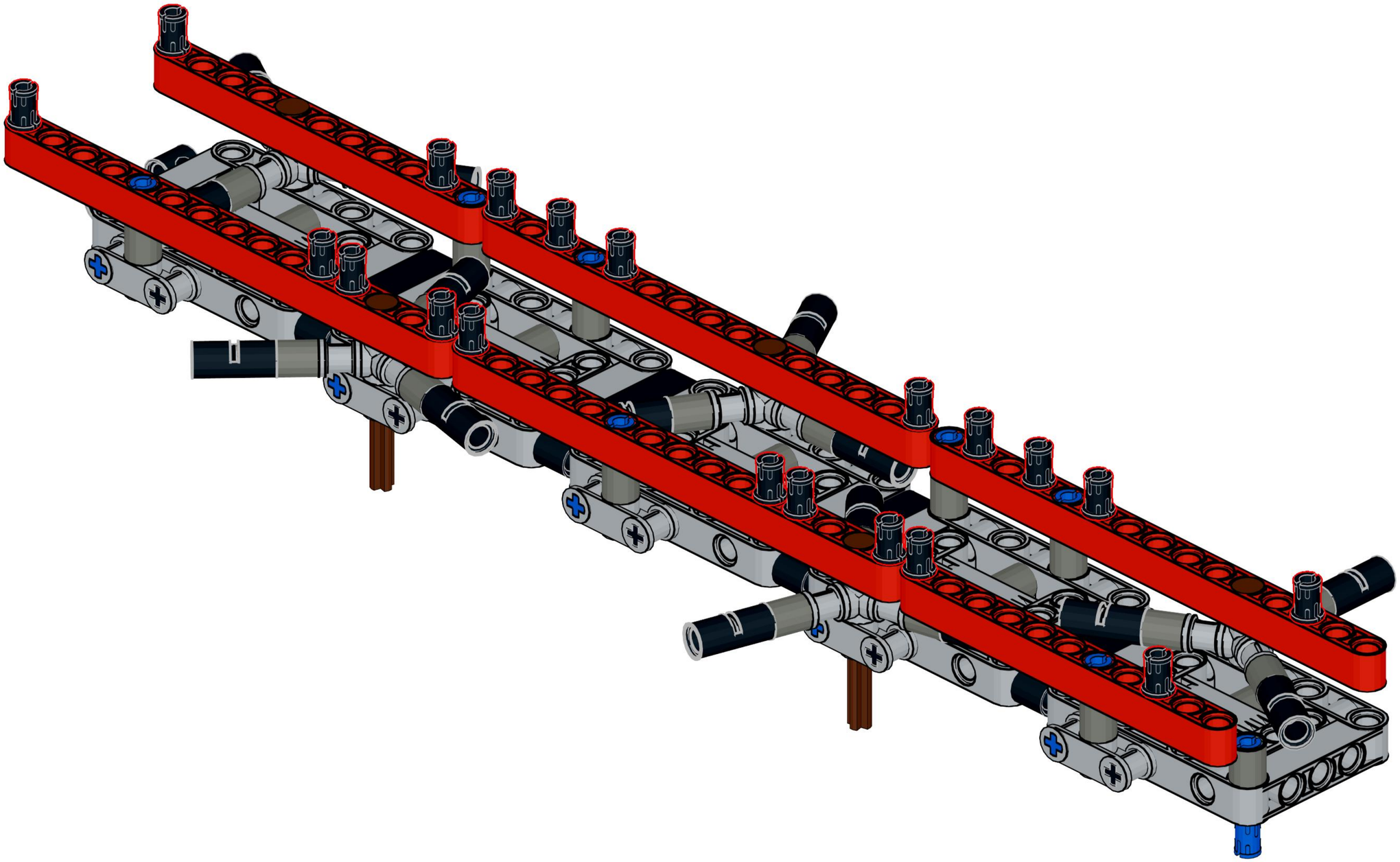

49

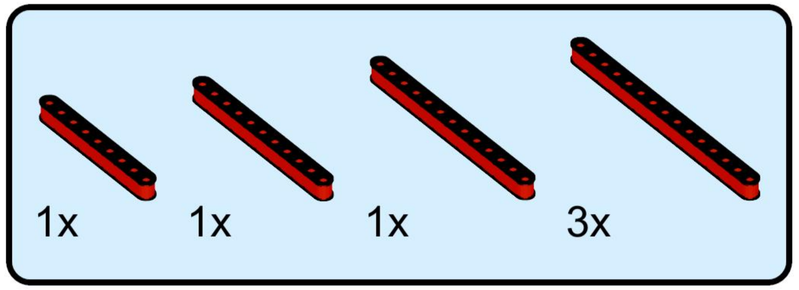

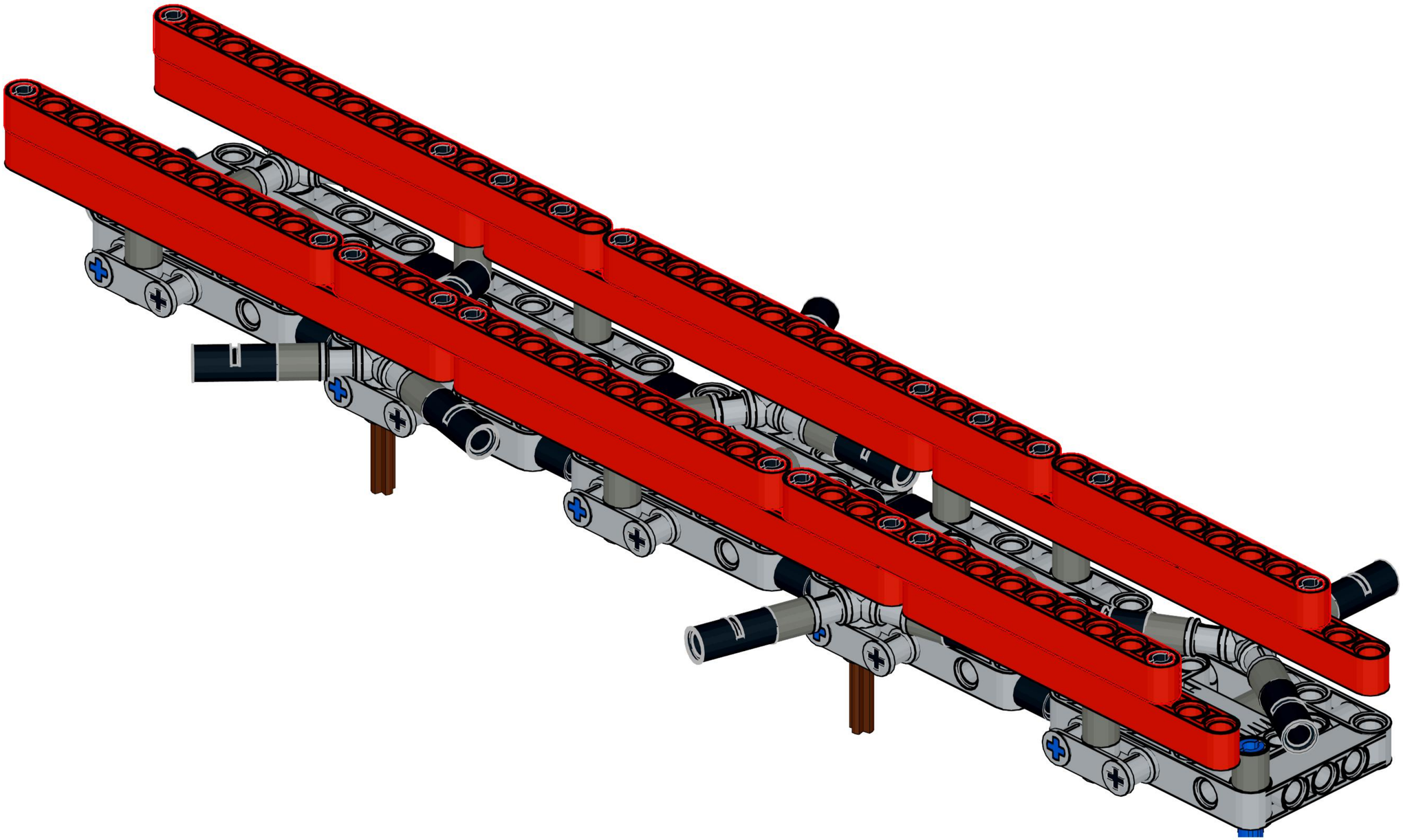

50

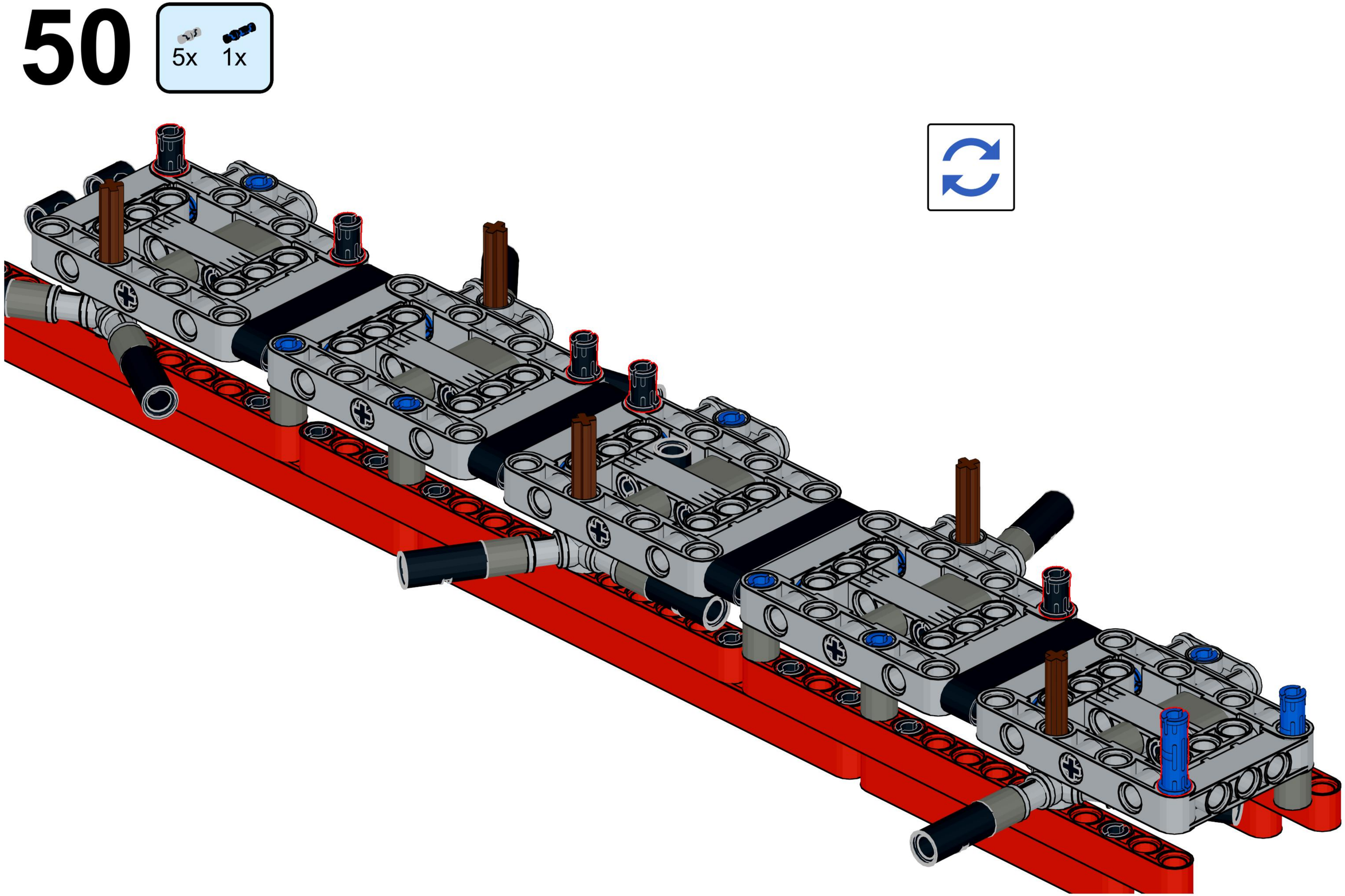

51

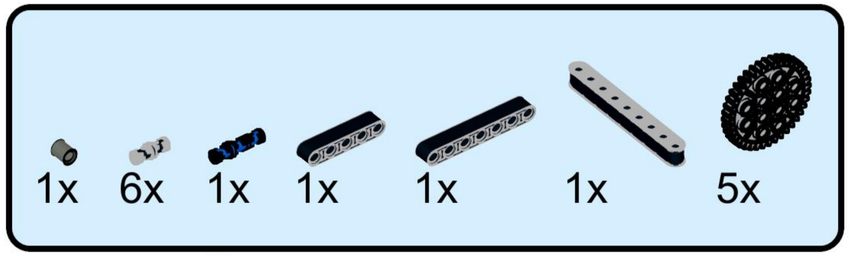

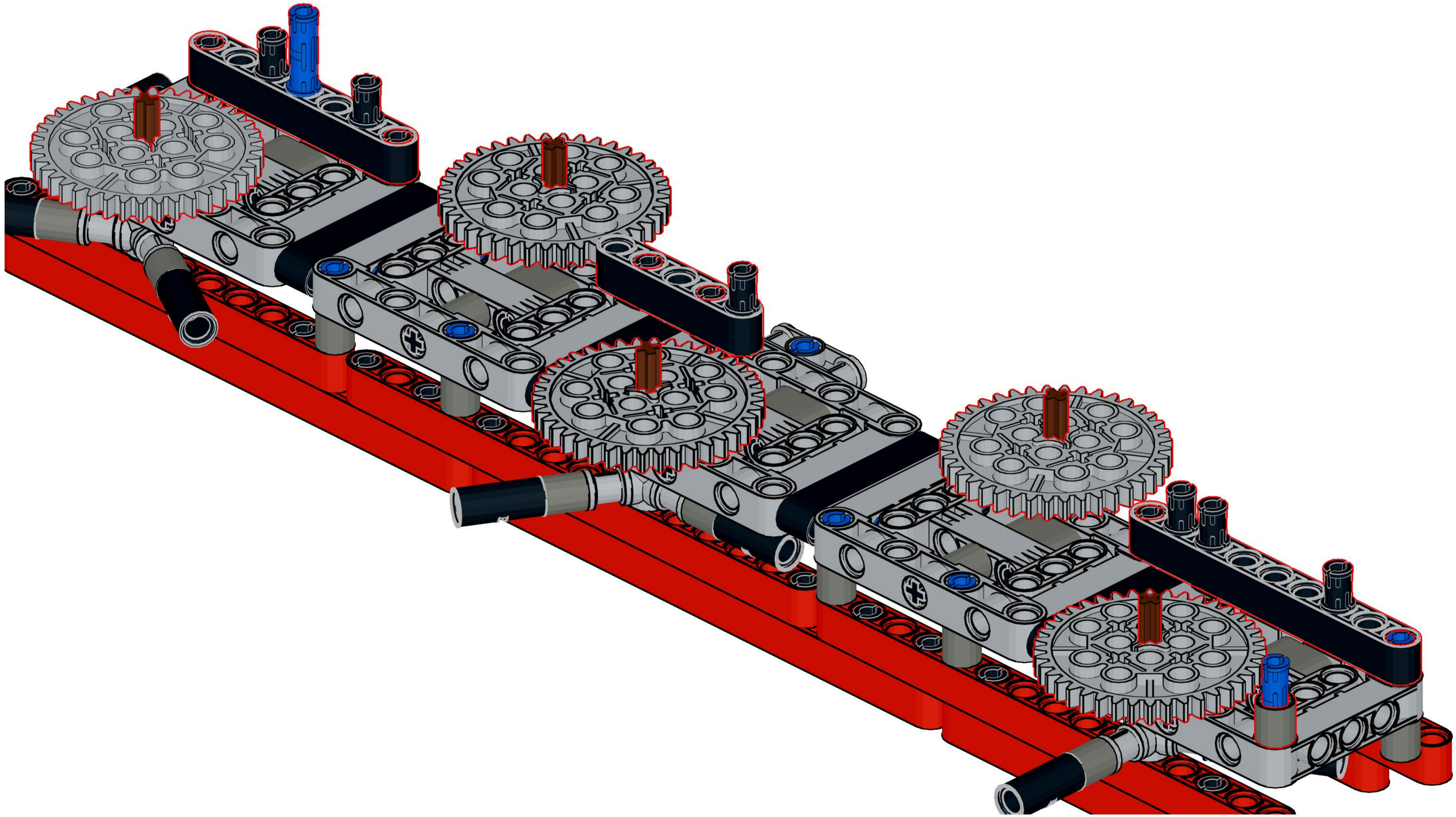

52

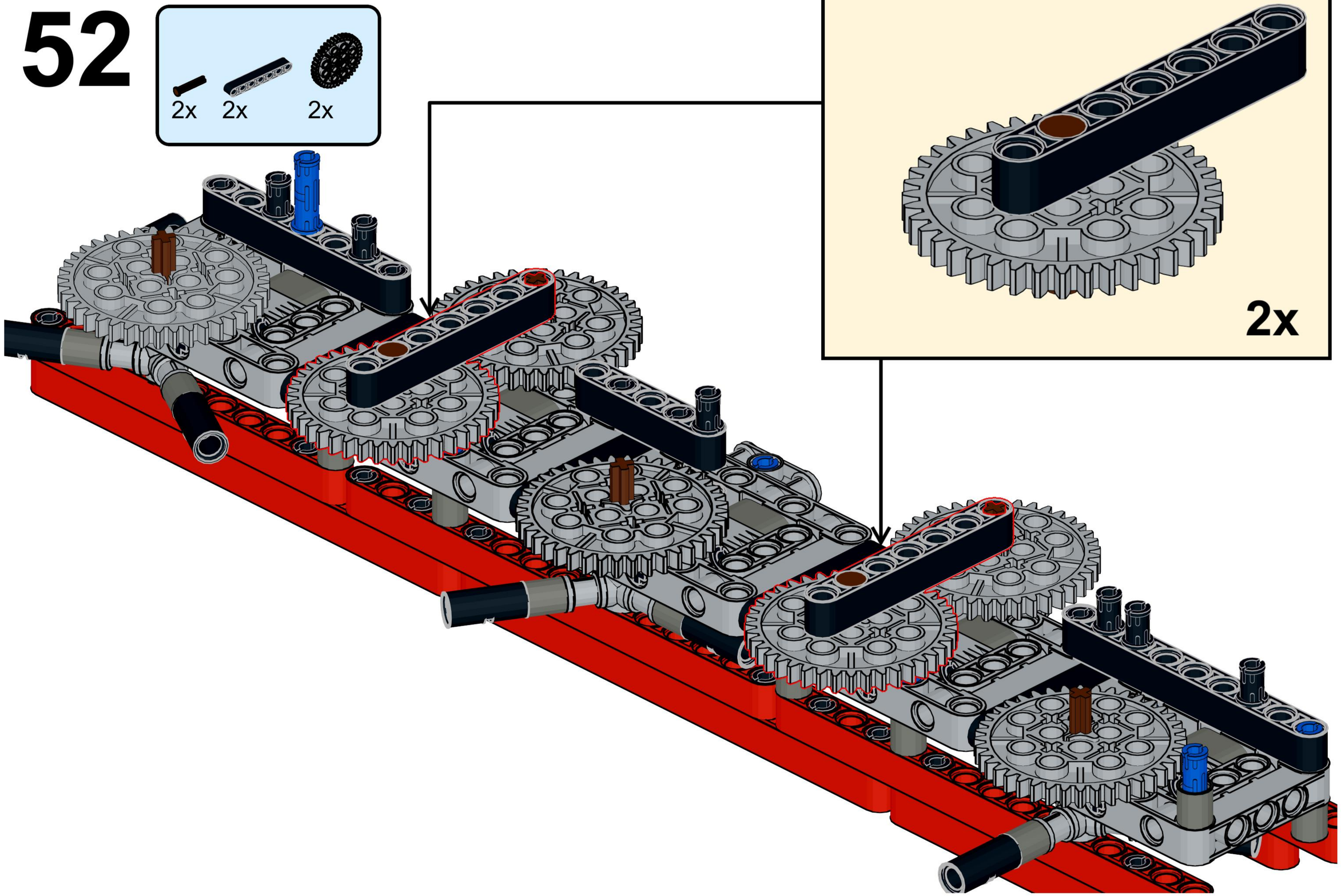

53

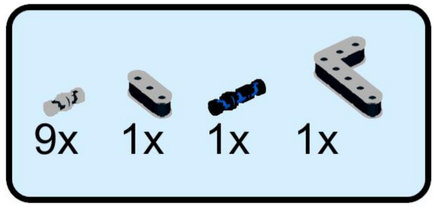

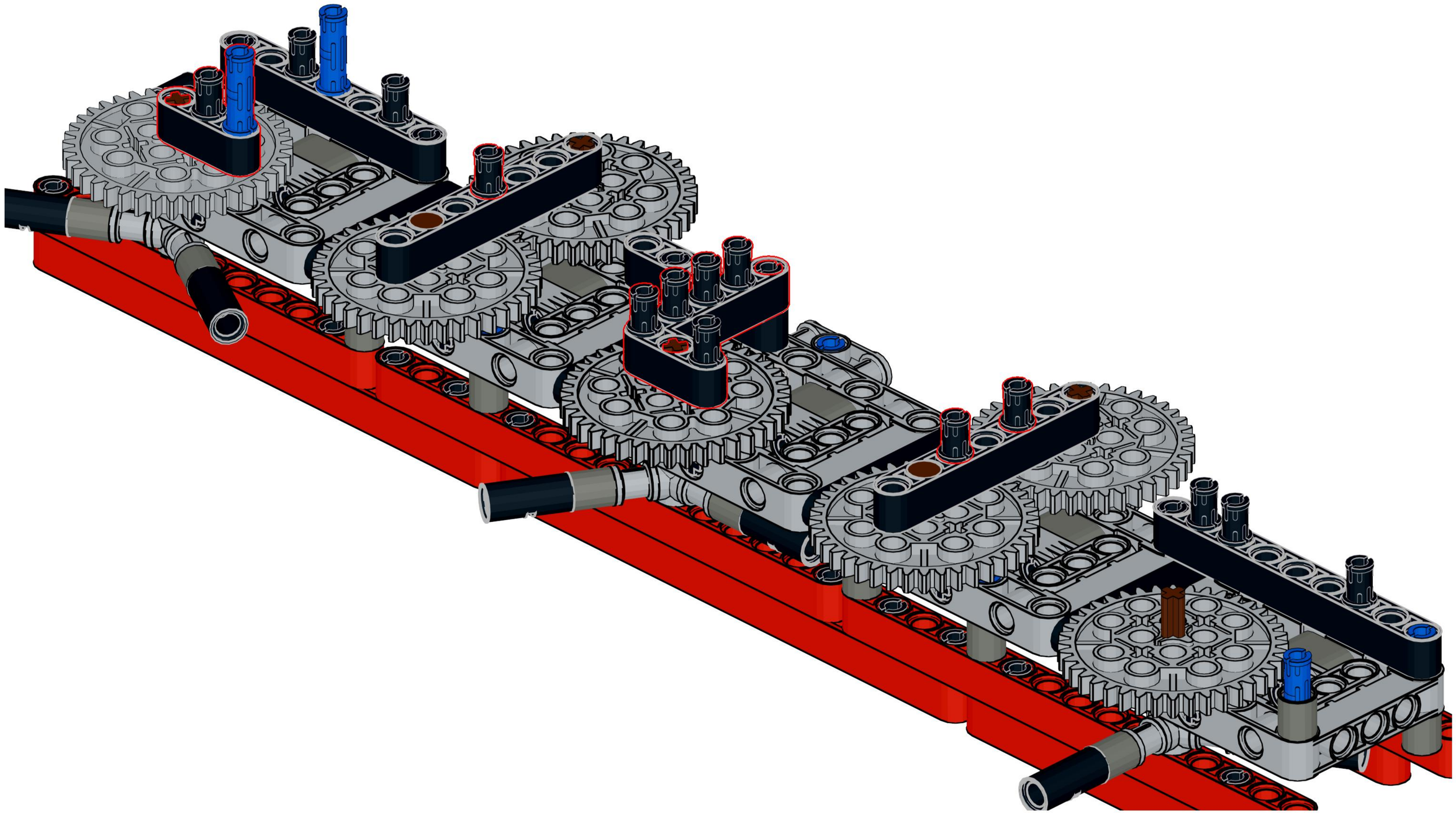

54

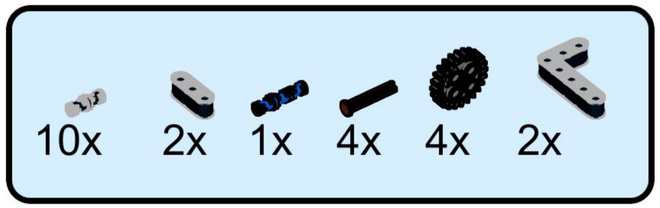

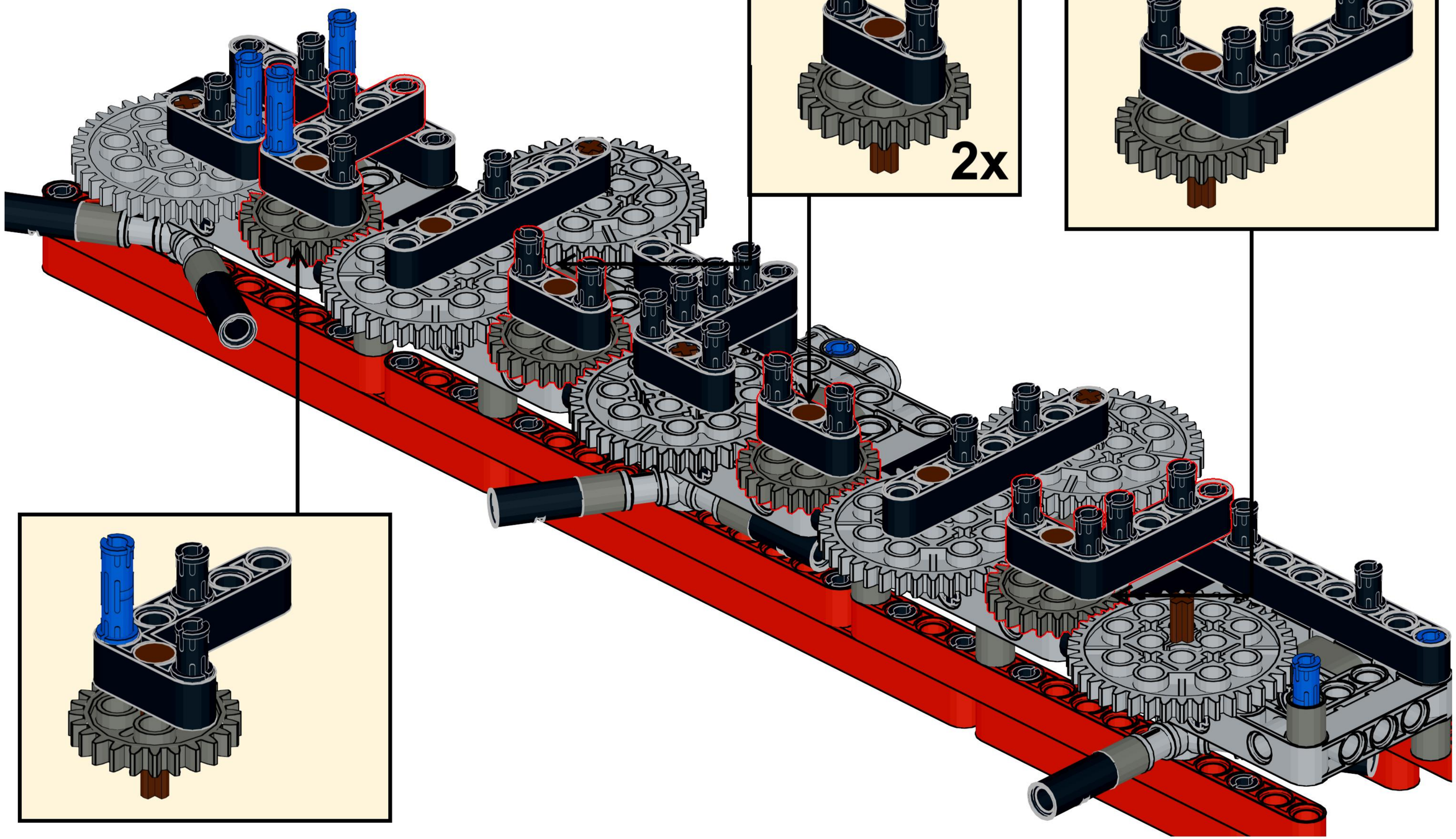

ROTOR ALIGNMENT!

Correct alignment of rotors is very important.
Make sure the rotors are aligned as shown in this picture.

Each rotor is aligned so that every arm will leave balls to an arm of the next rotor.
So every rotor from bottom to top is slightly "behind" the previous one in its rotation.

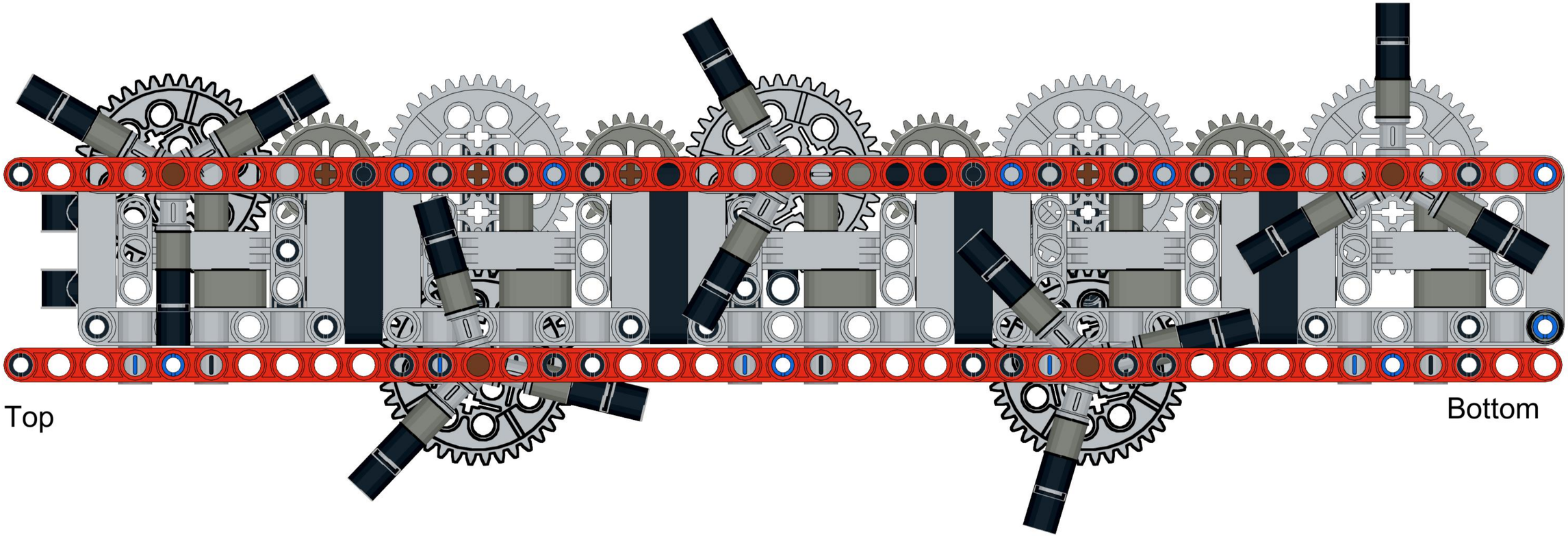

56

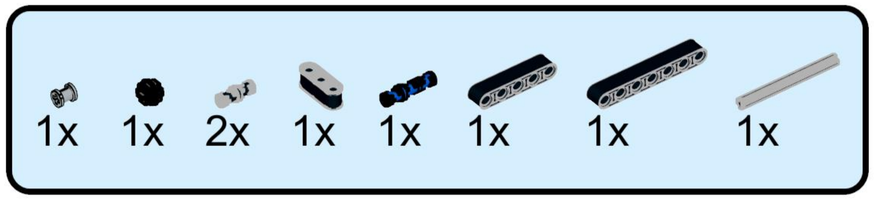

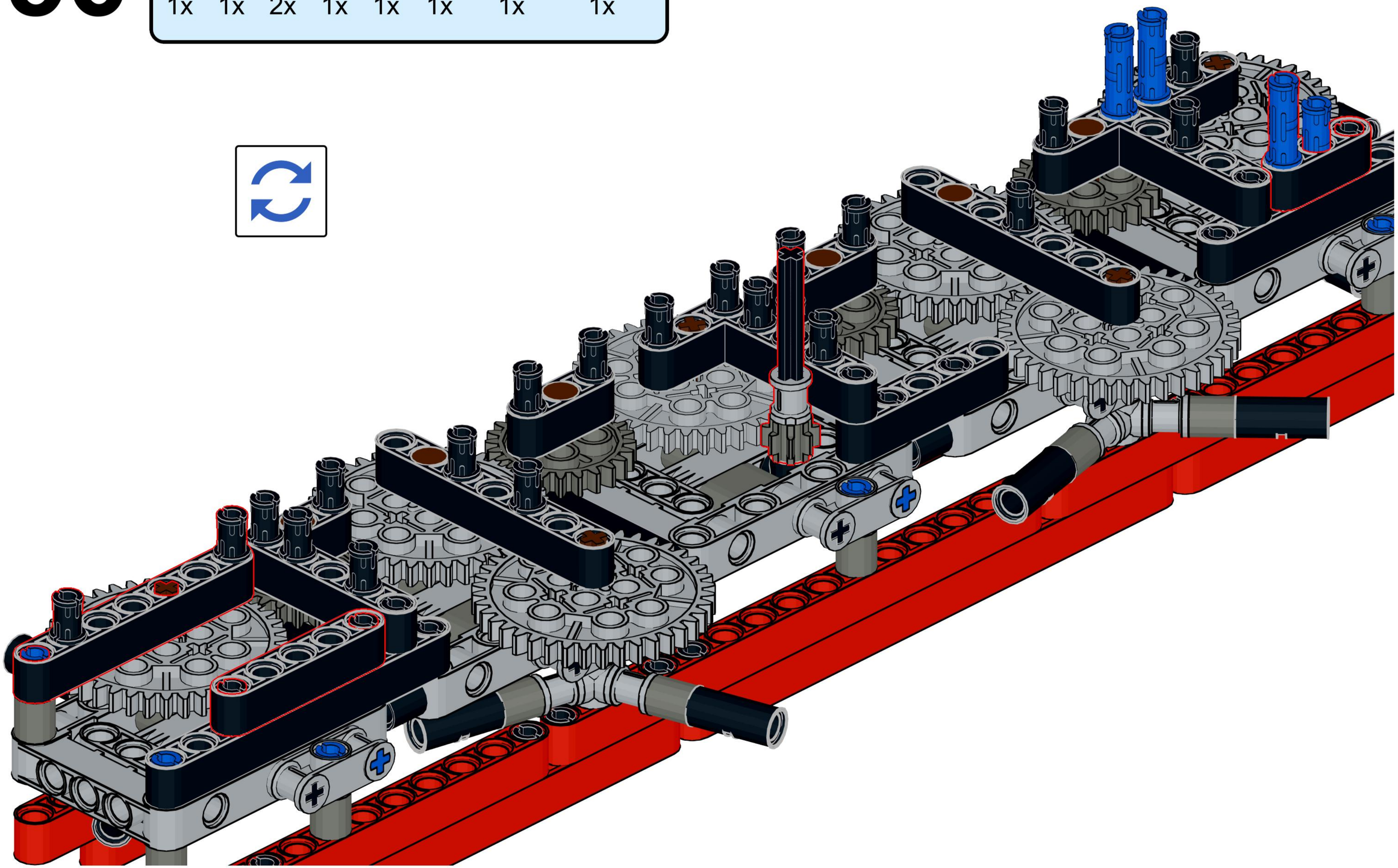

57

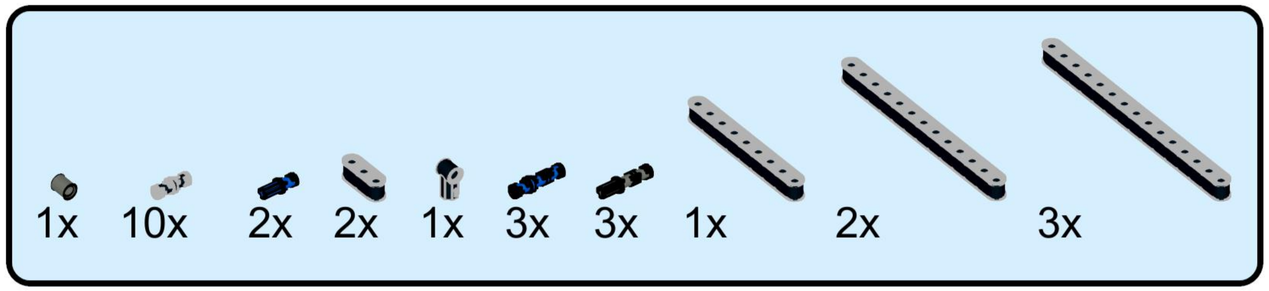

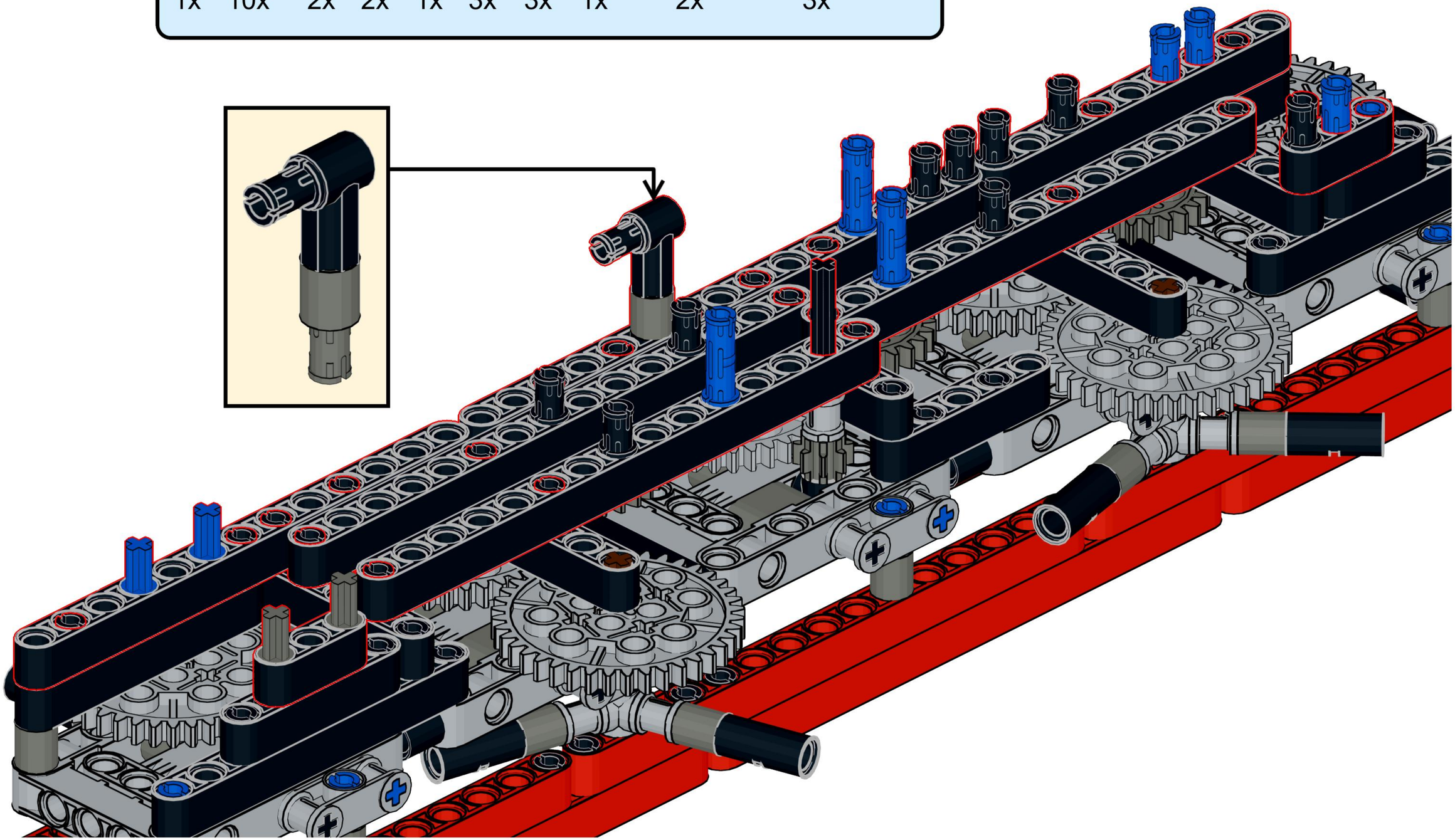

58

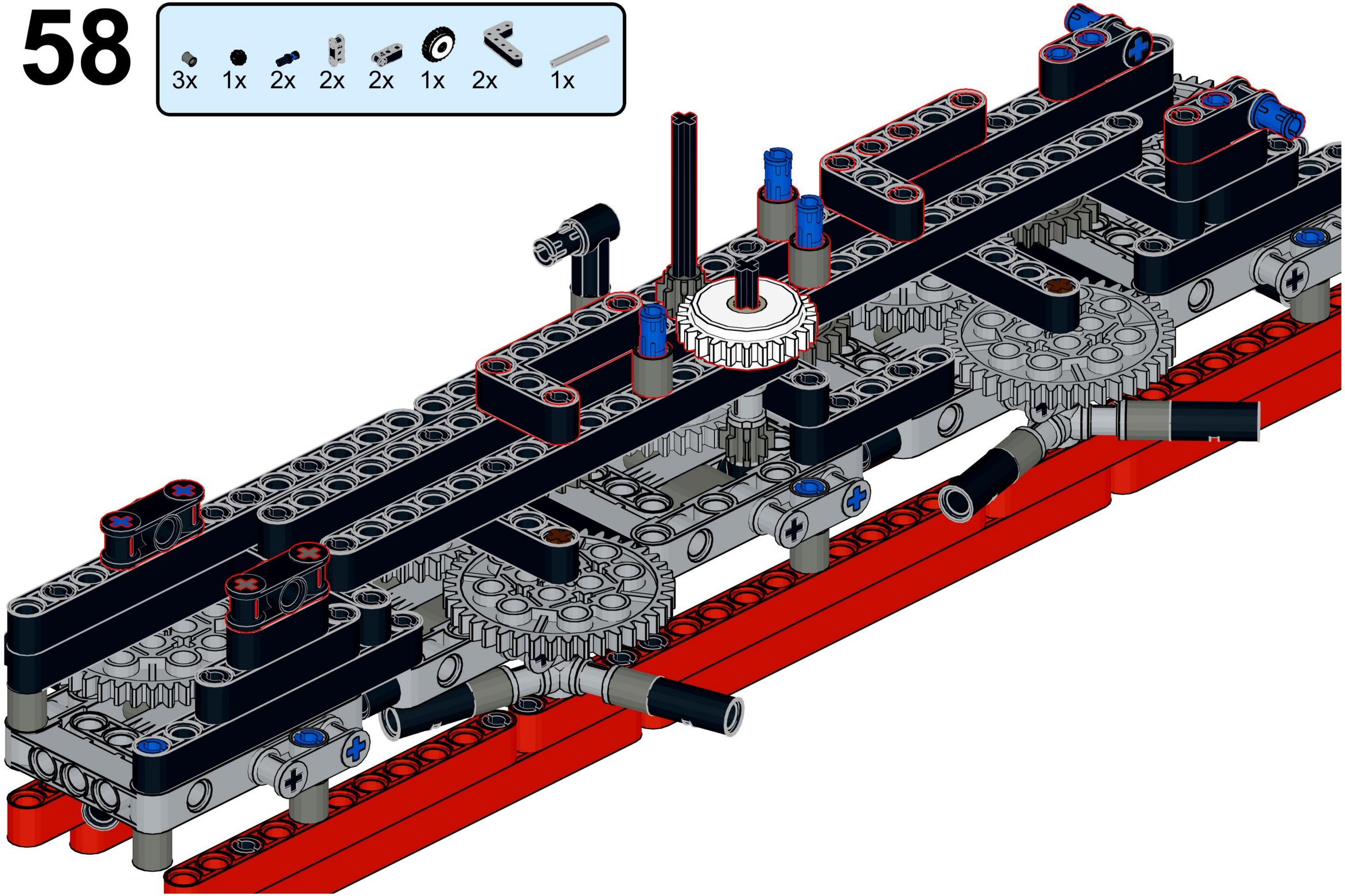

59

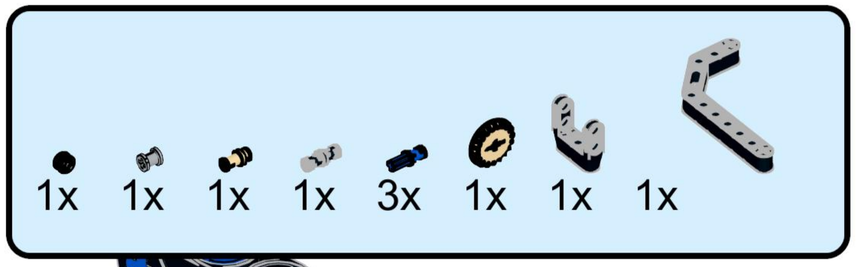

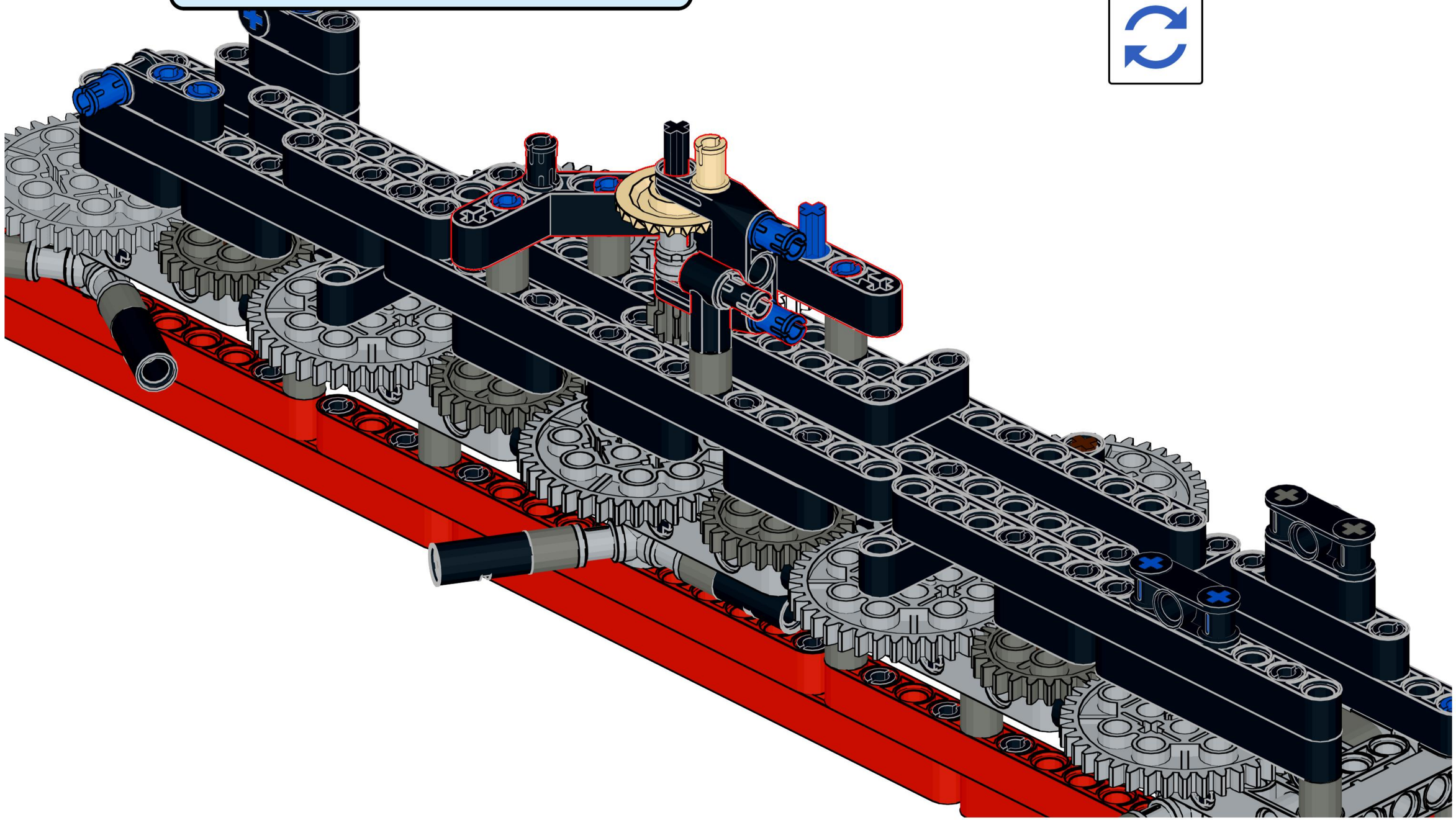

60

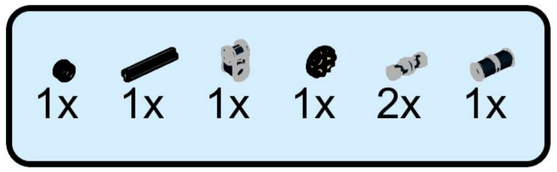

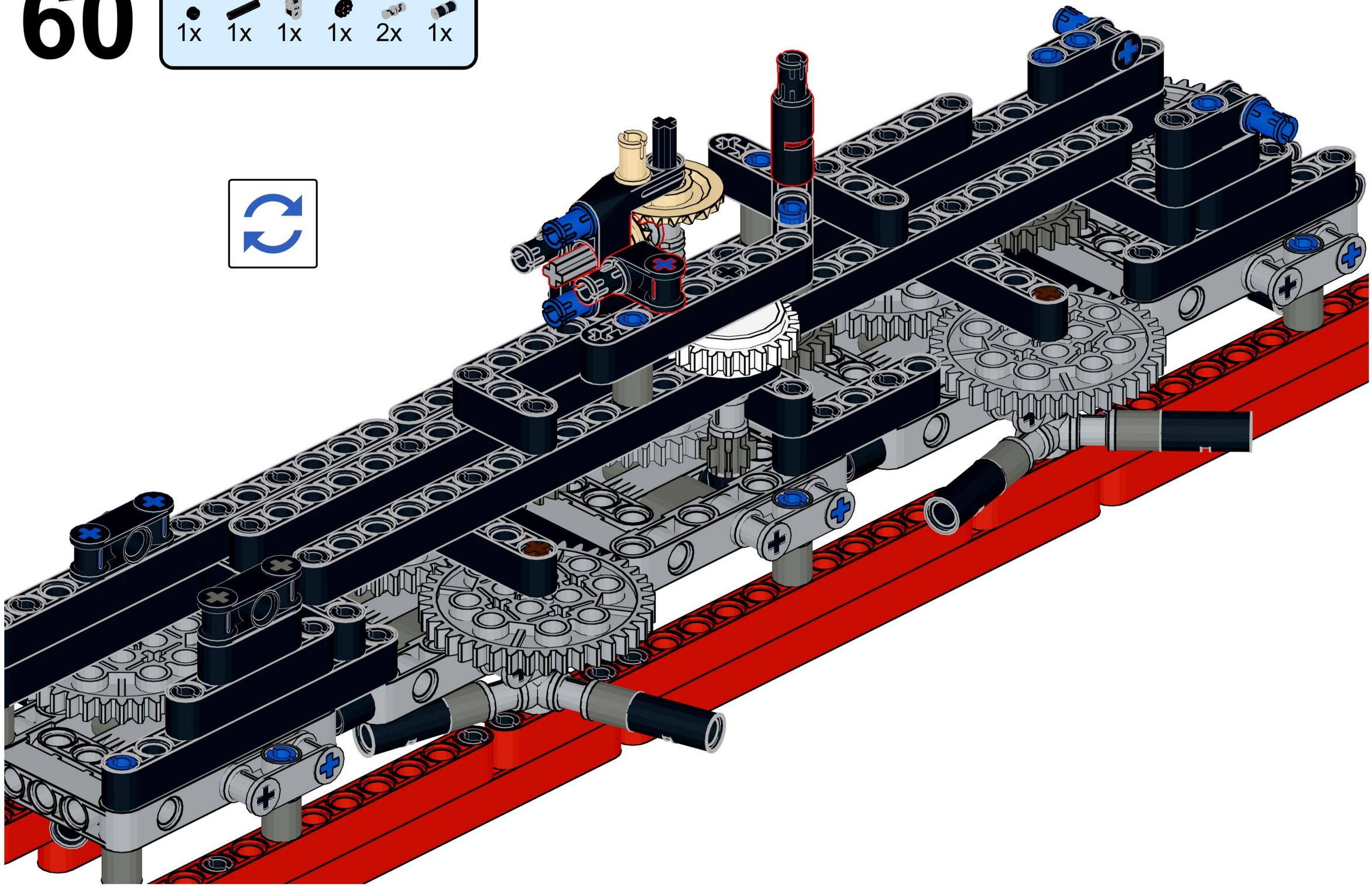

61

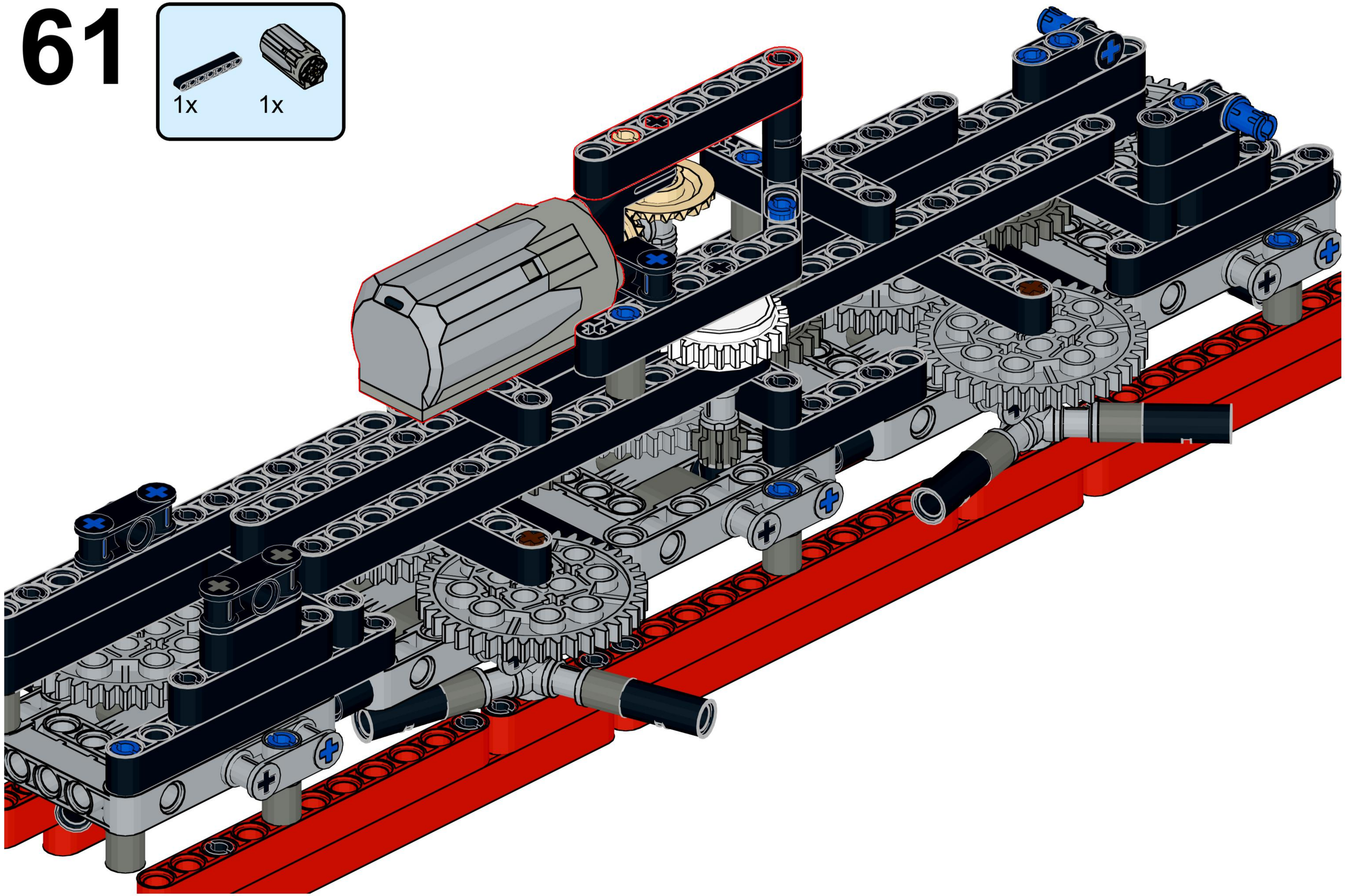

62

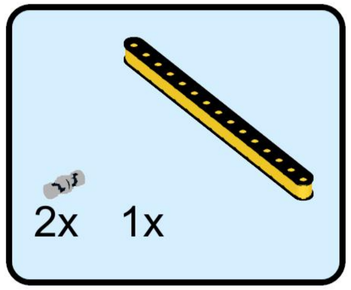

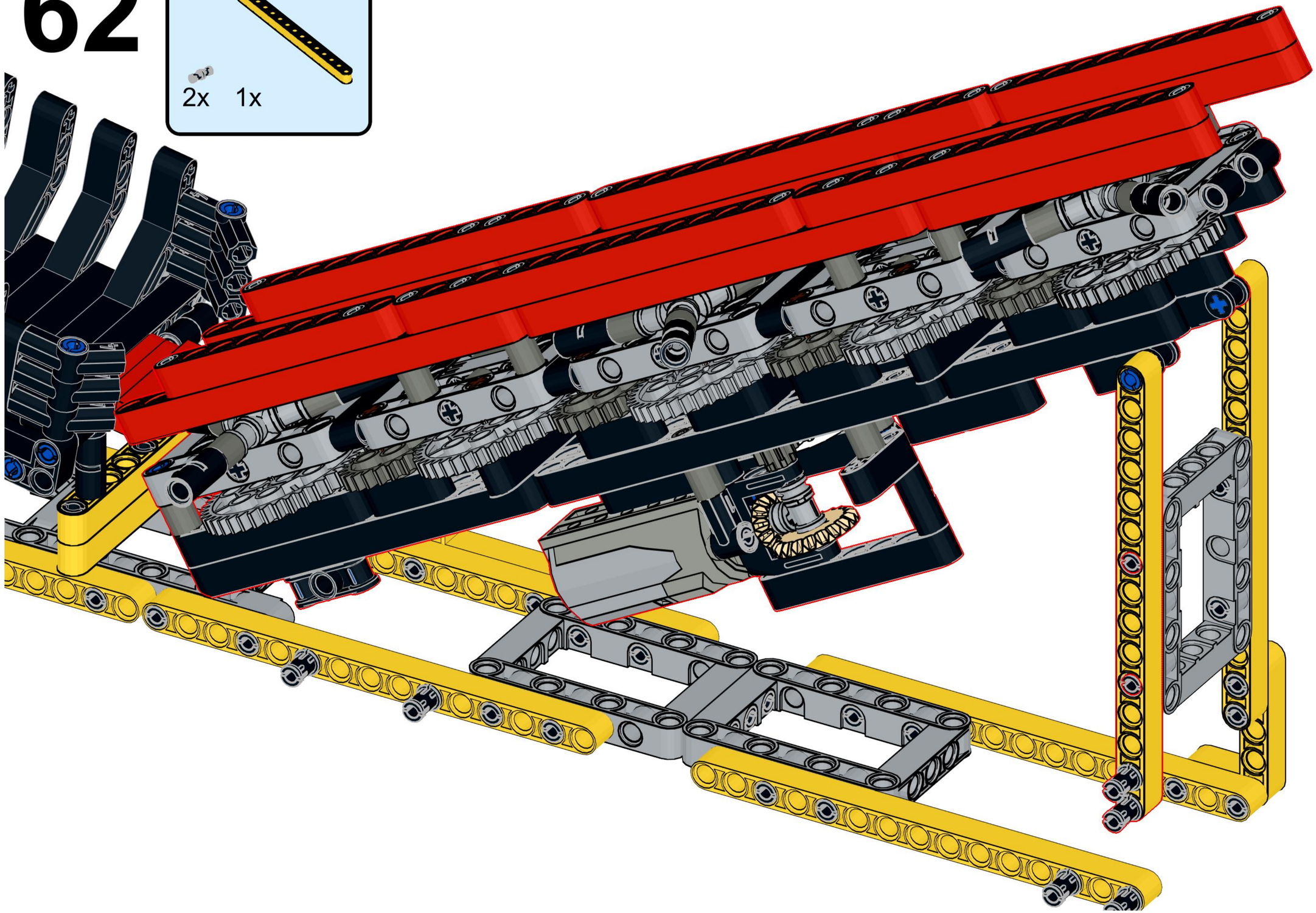

63

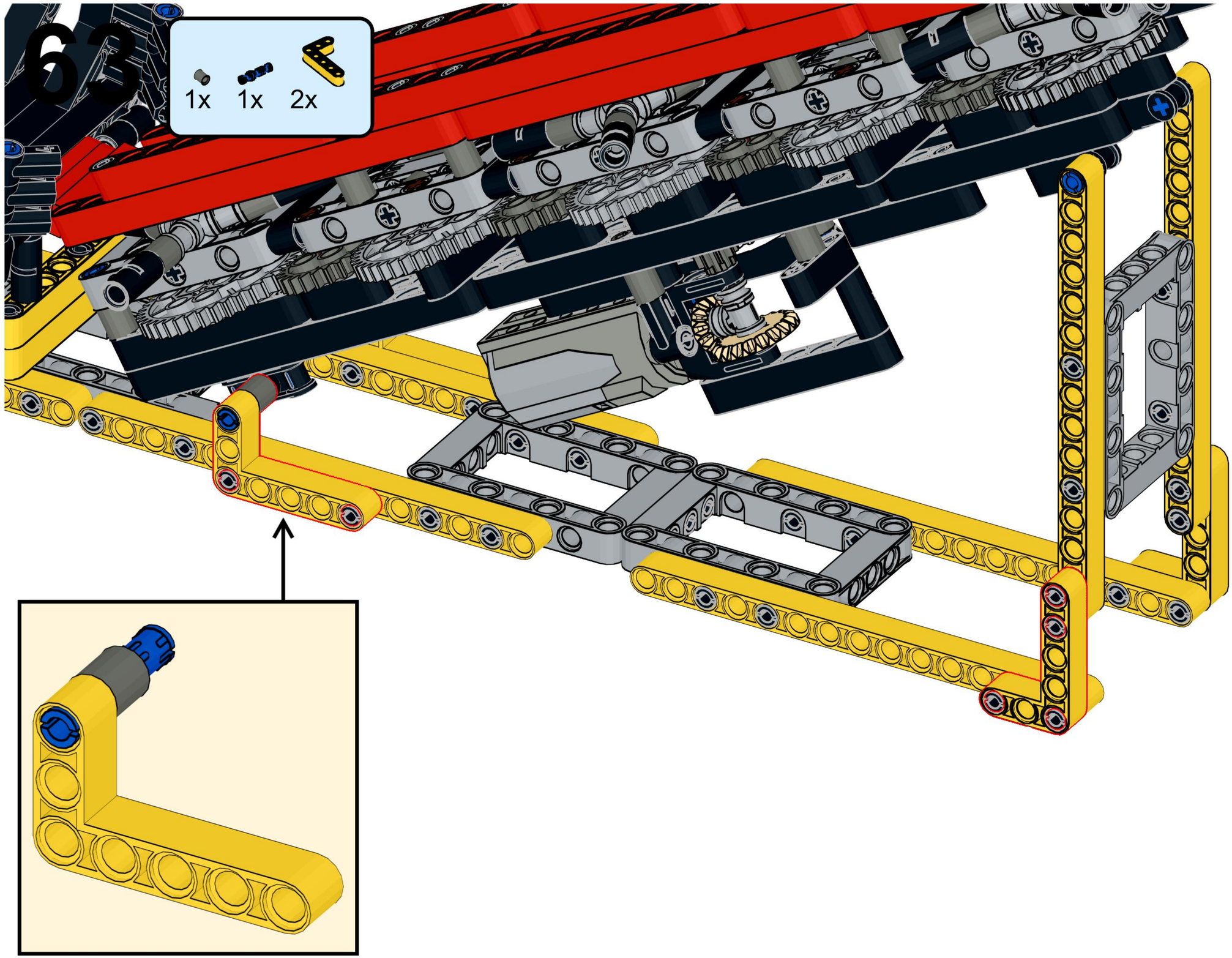

64

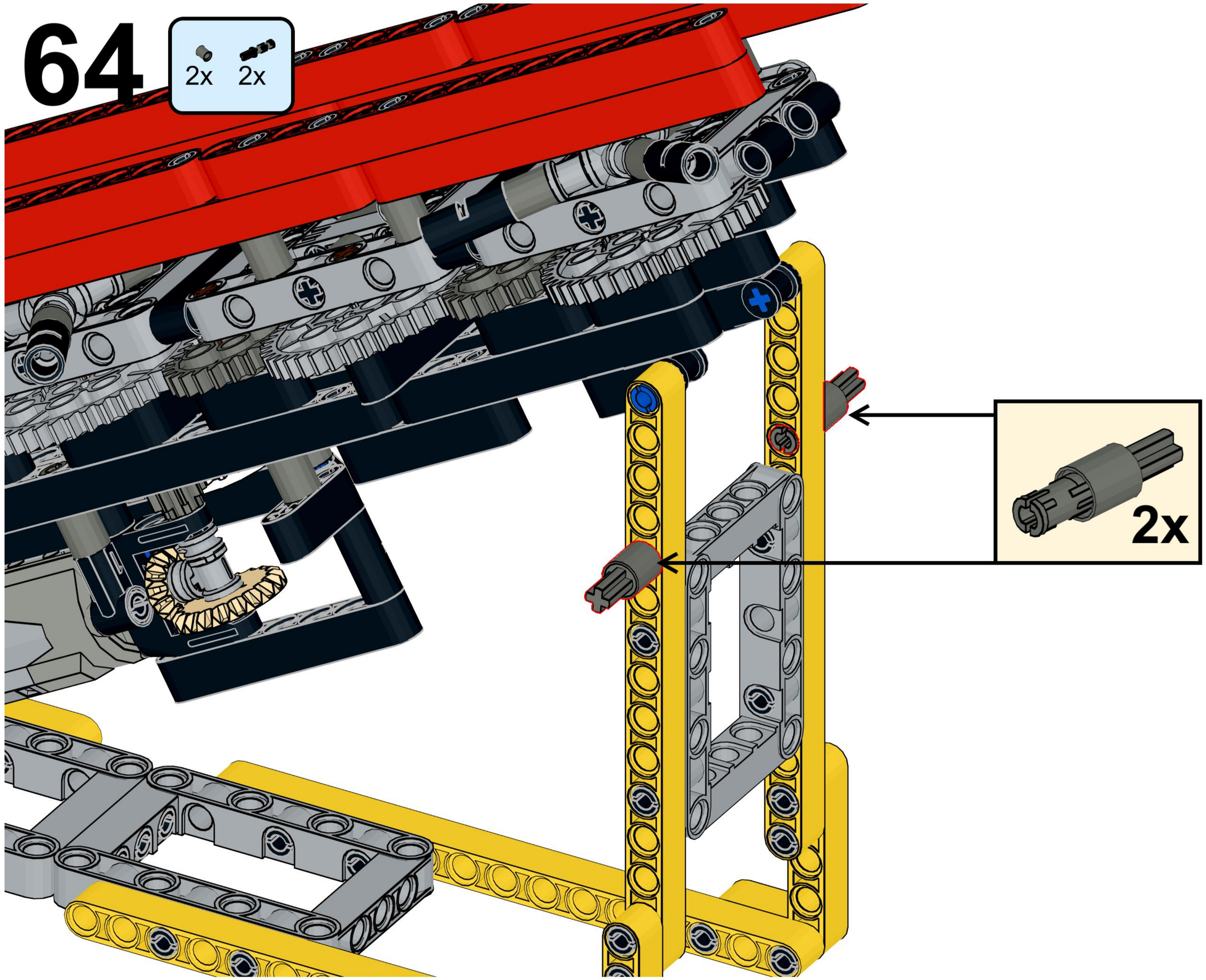

65

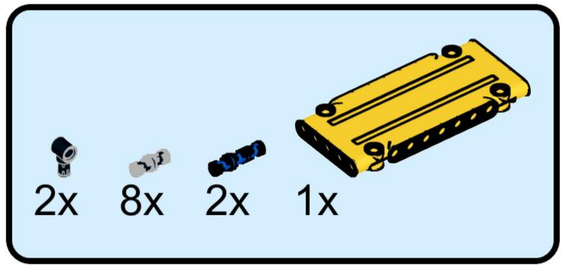

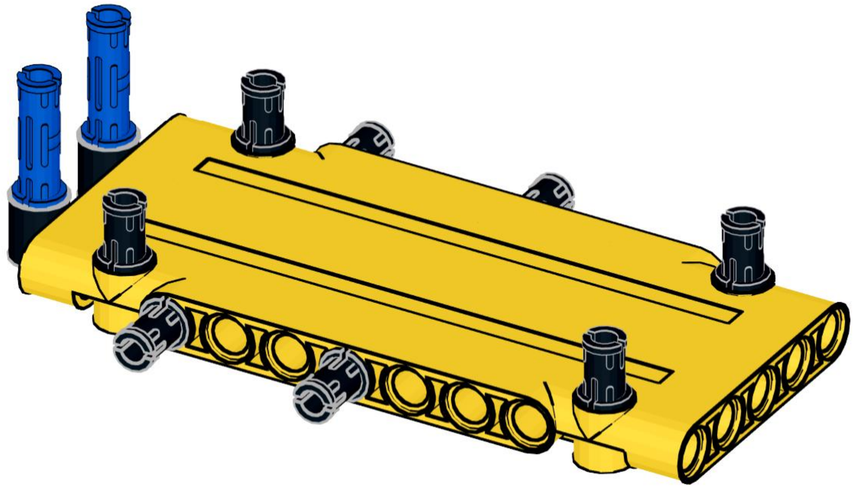

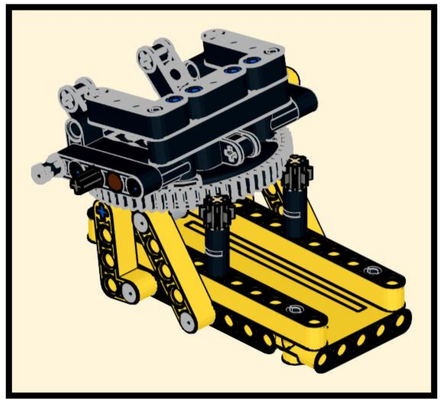

66

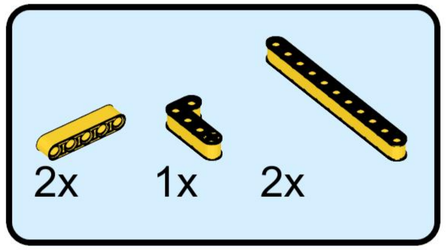

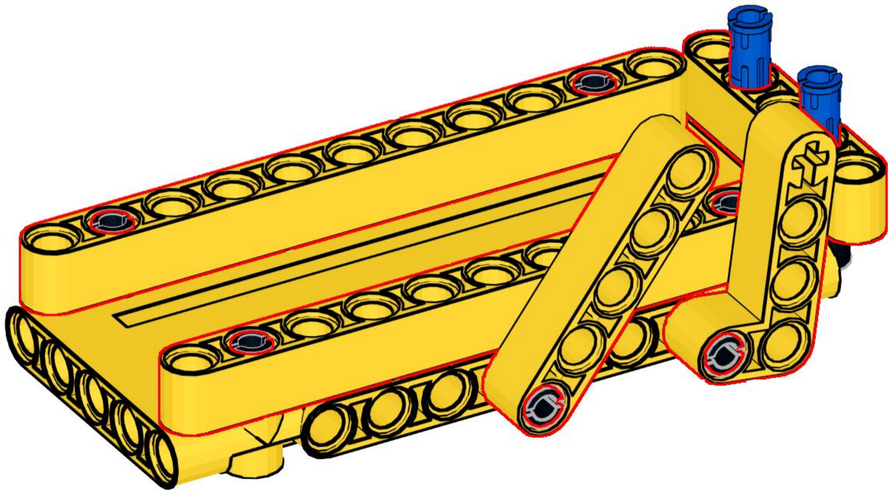

67

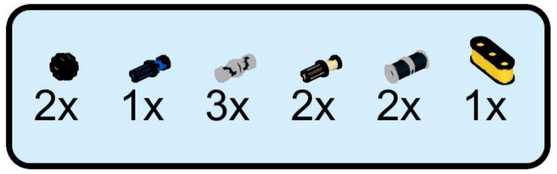

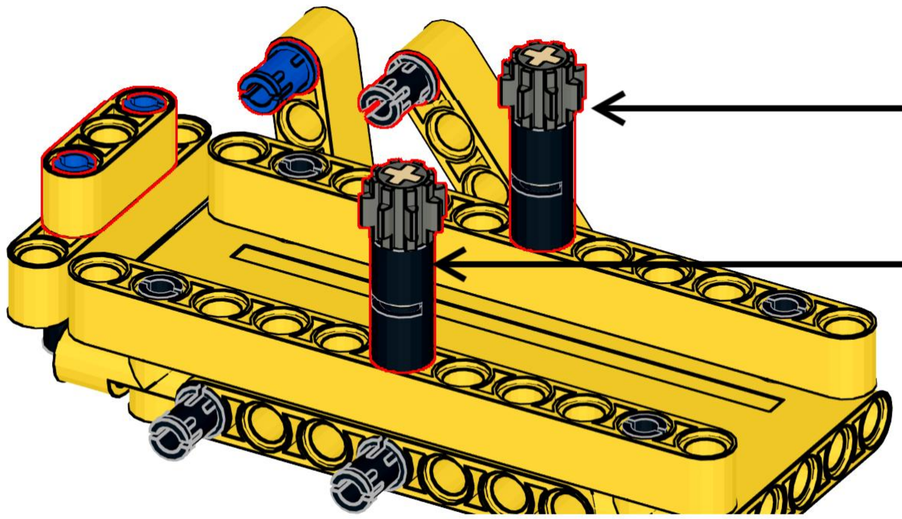

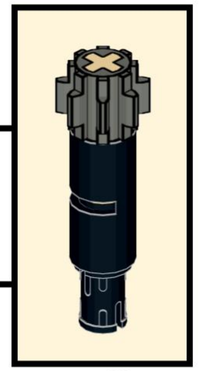

2x

68

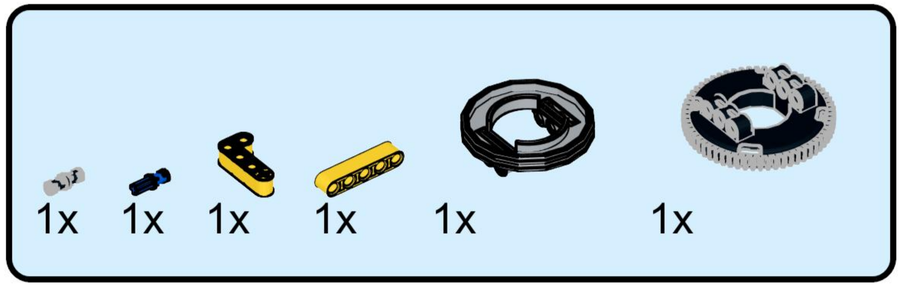

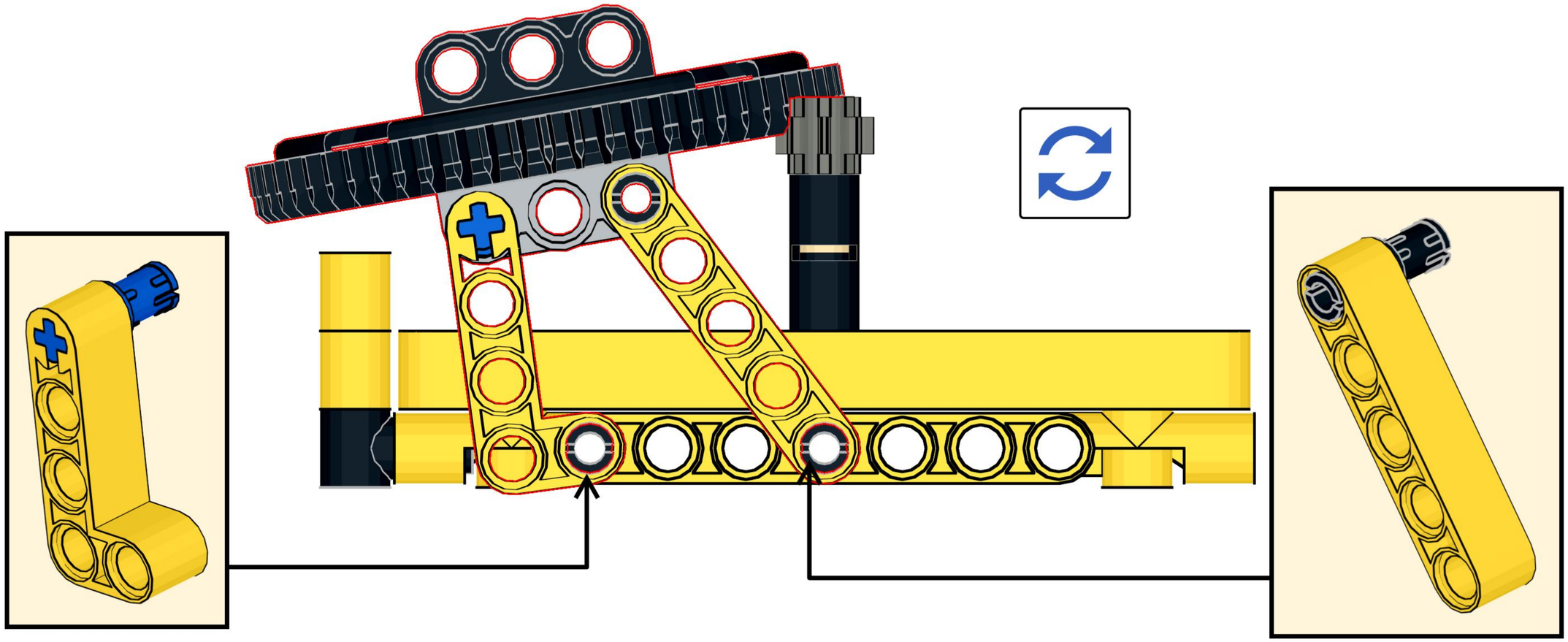

69

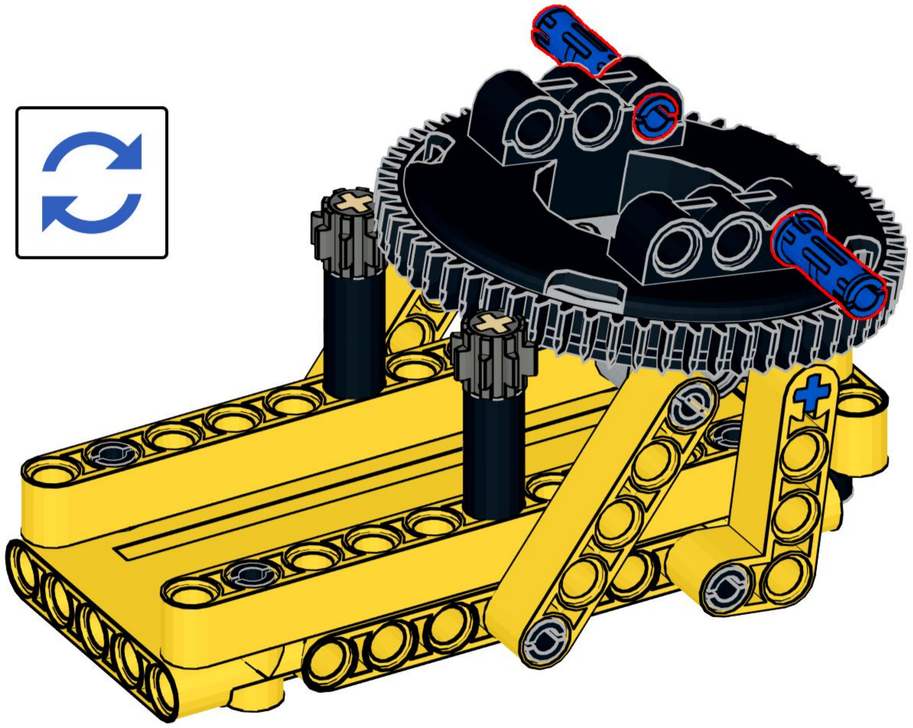

70

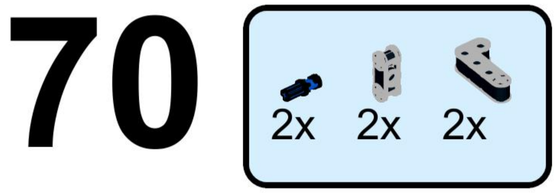

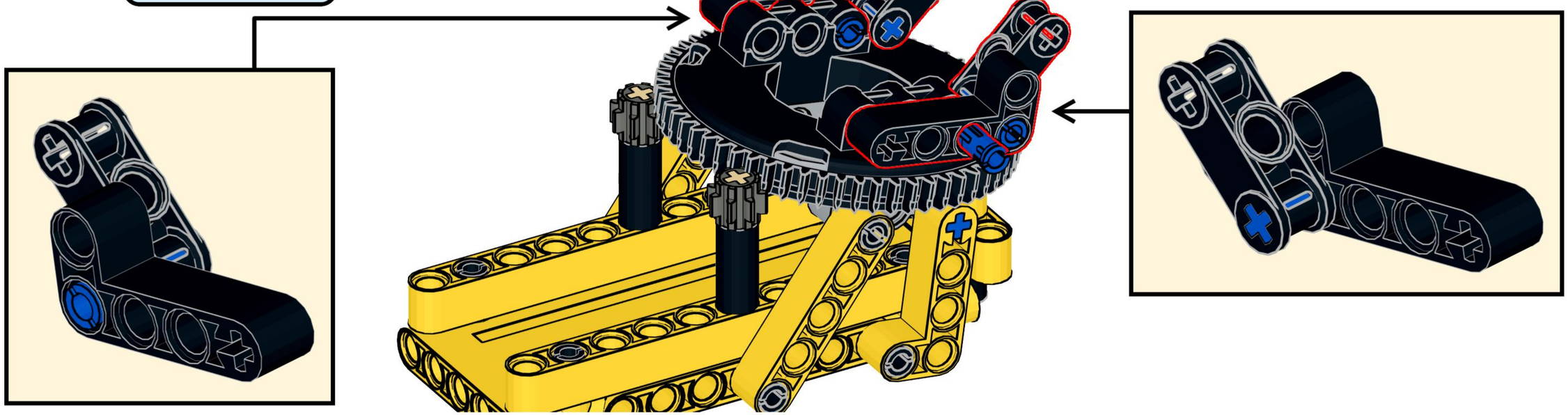

71

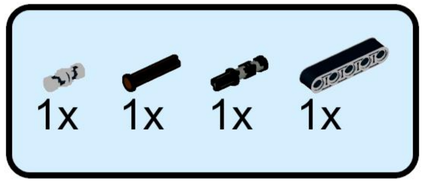

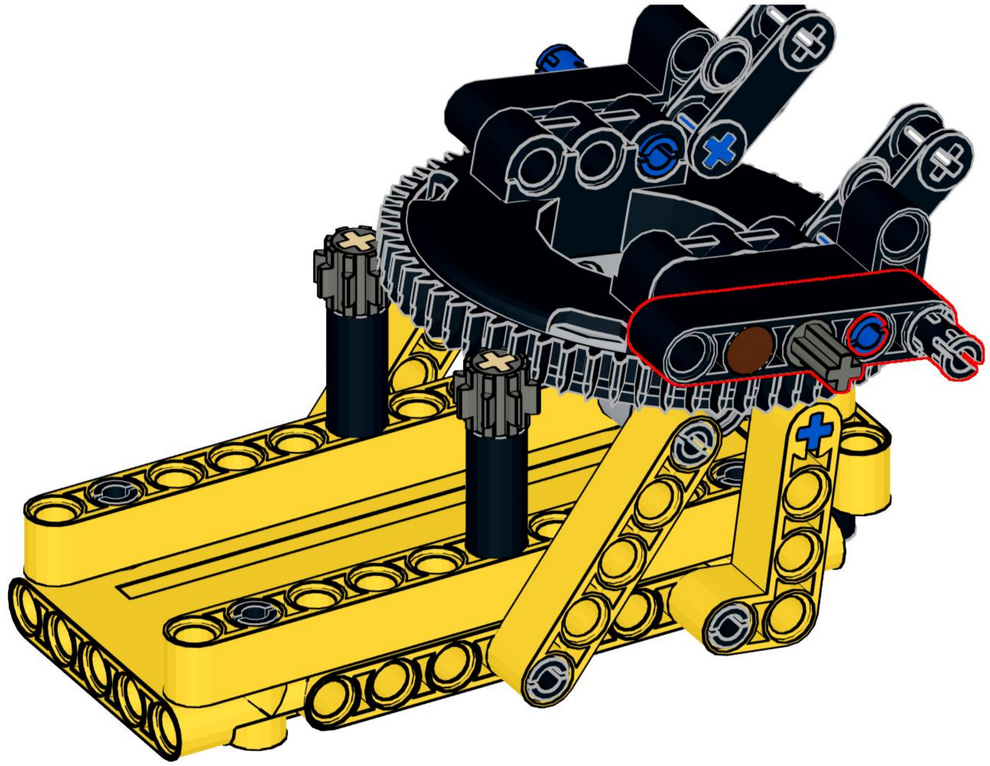

72

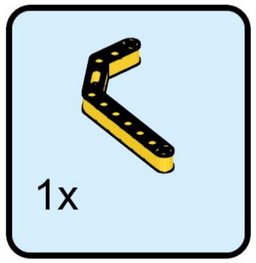

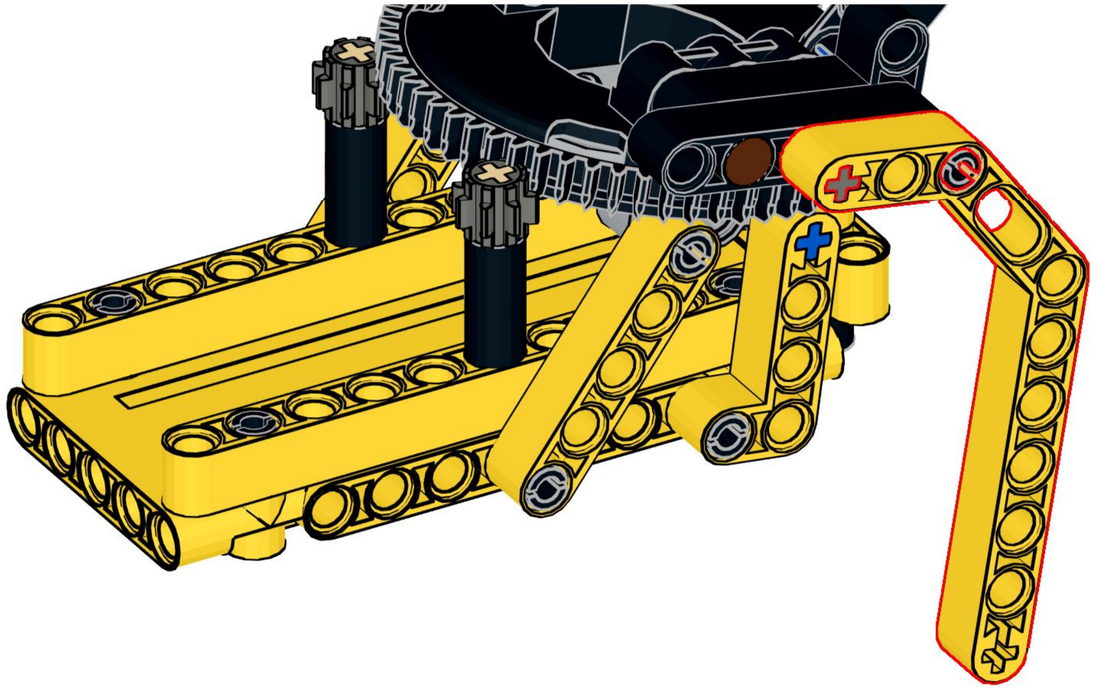

73

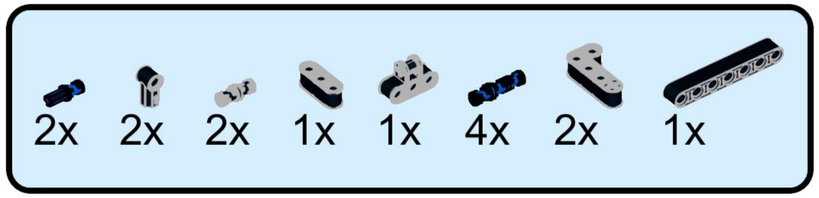

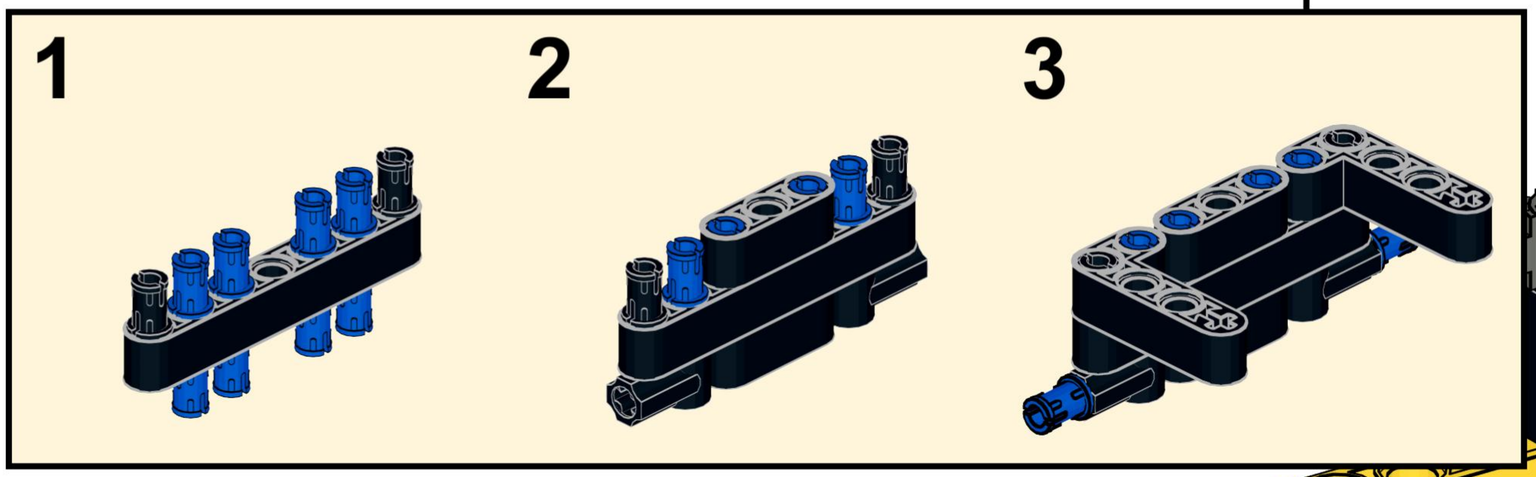

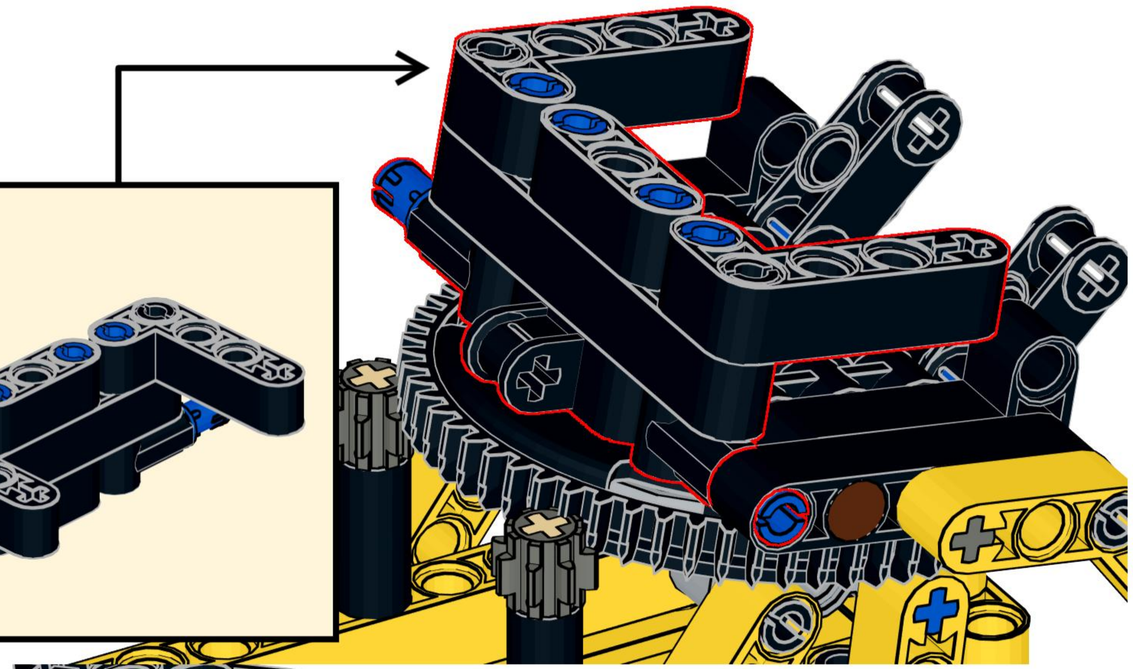

74

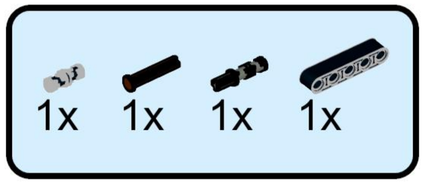

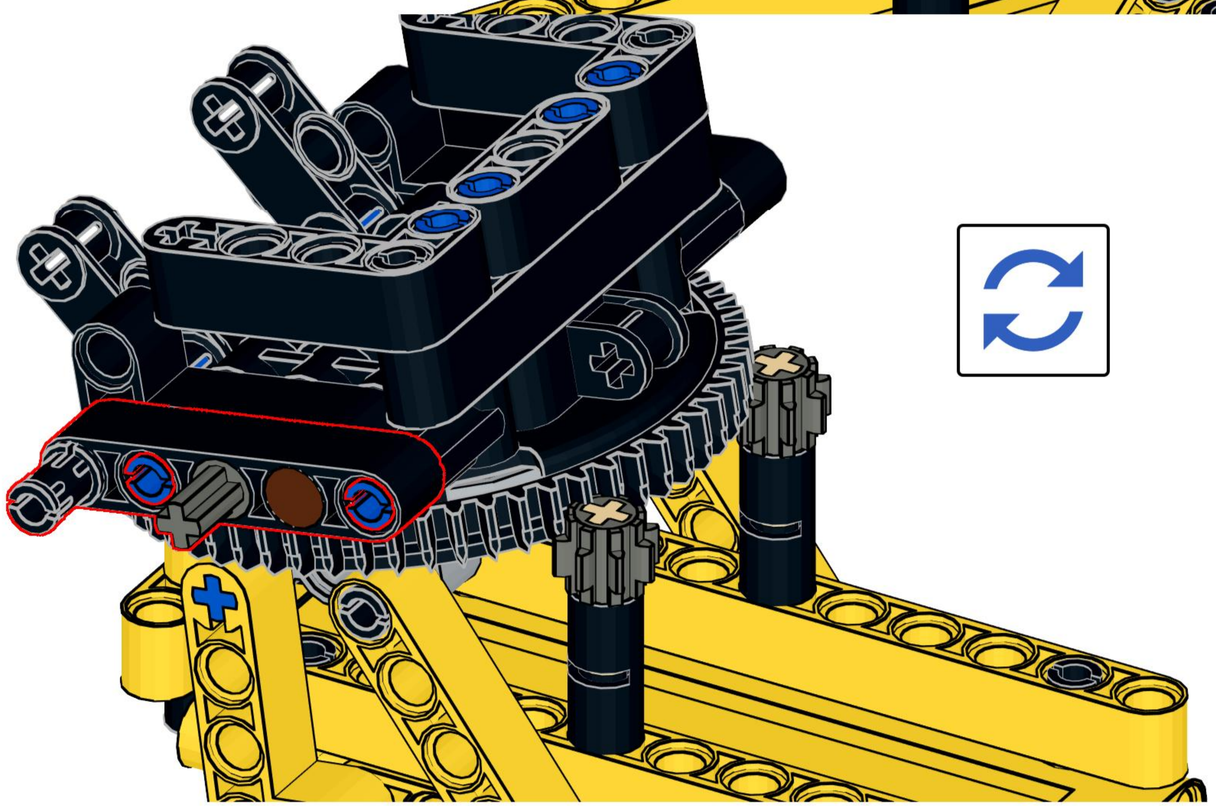

75

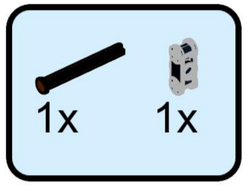

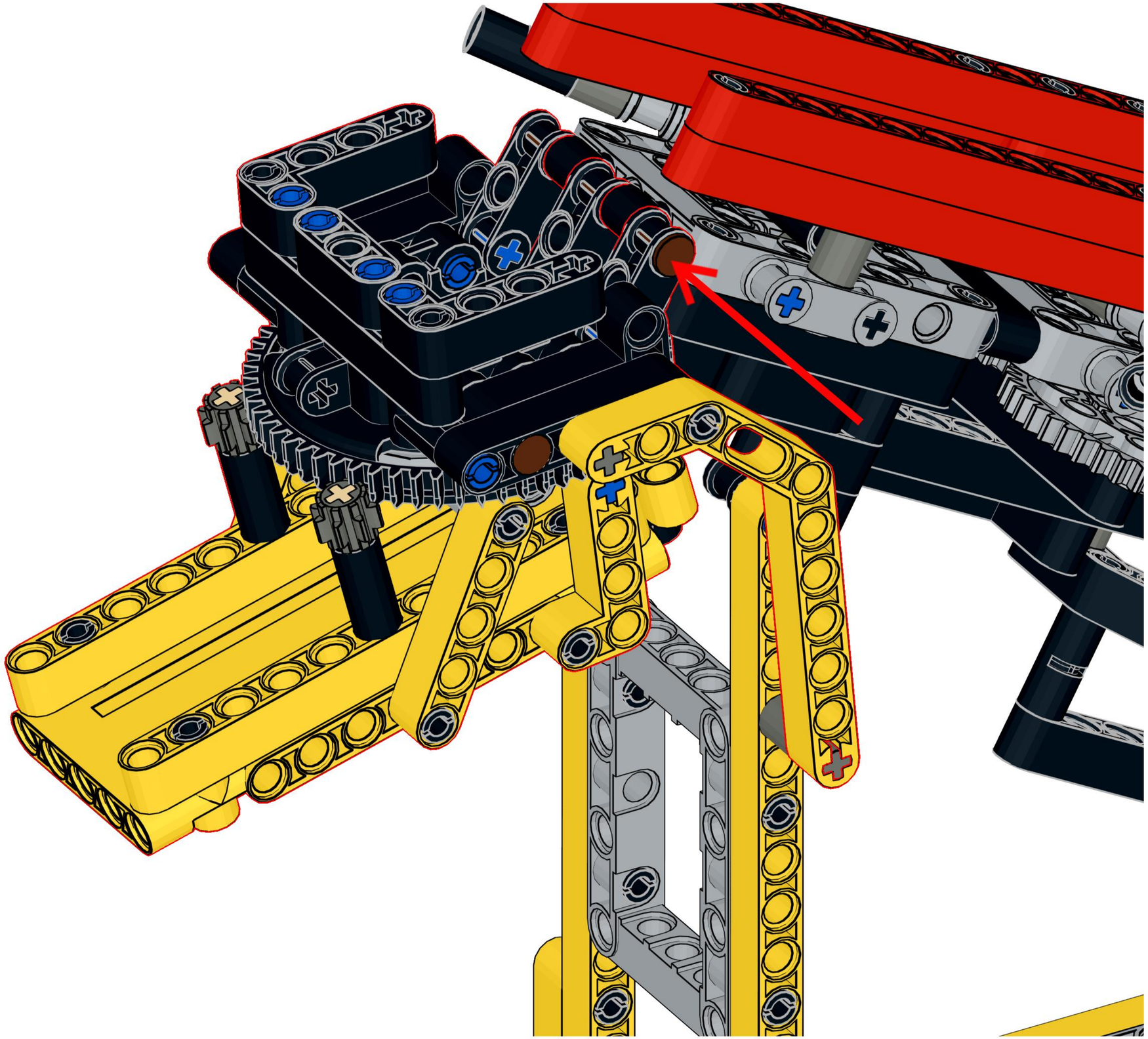

76

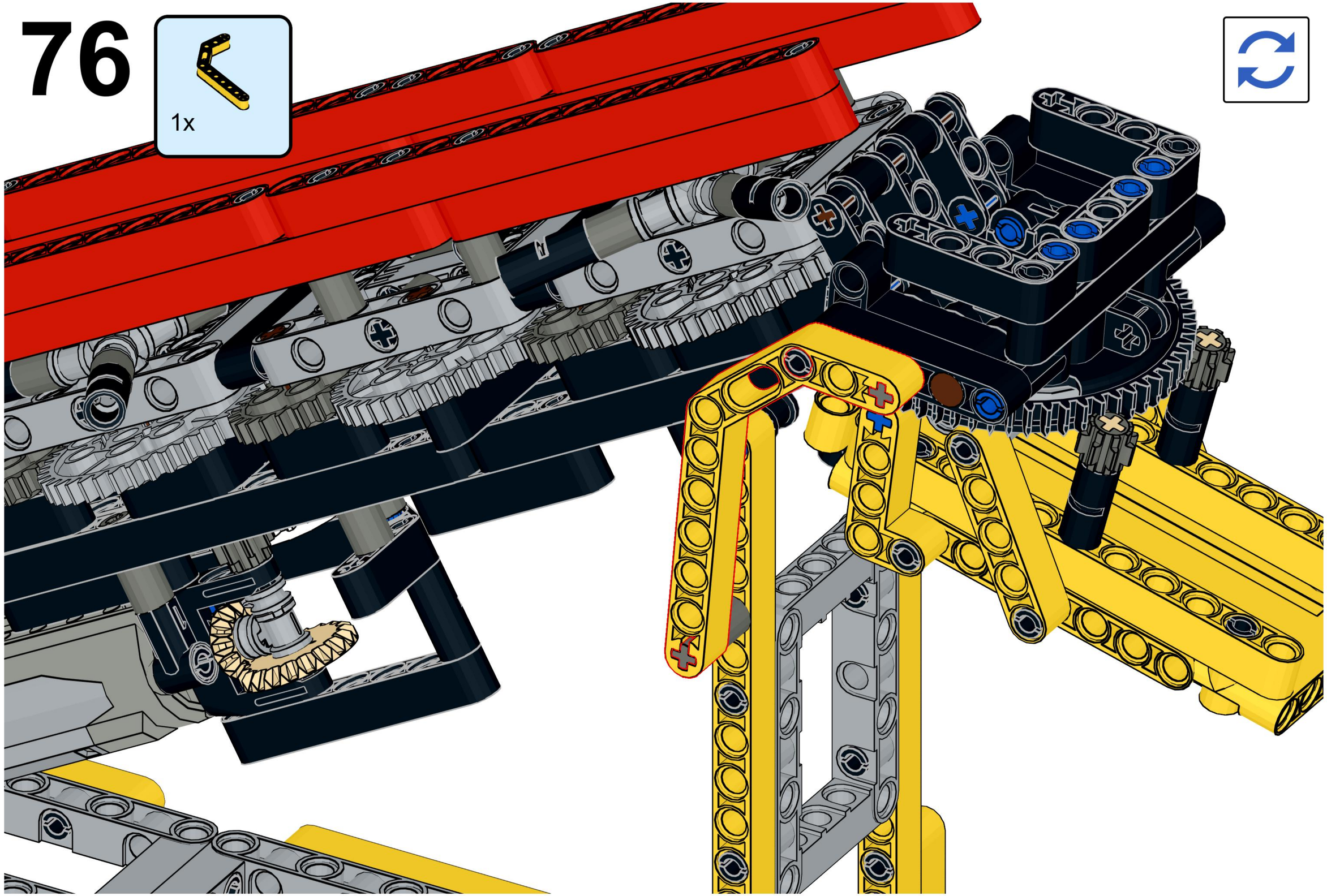

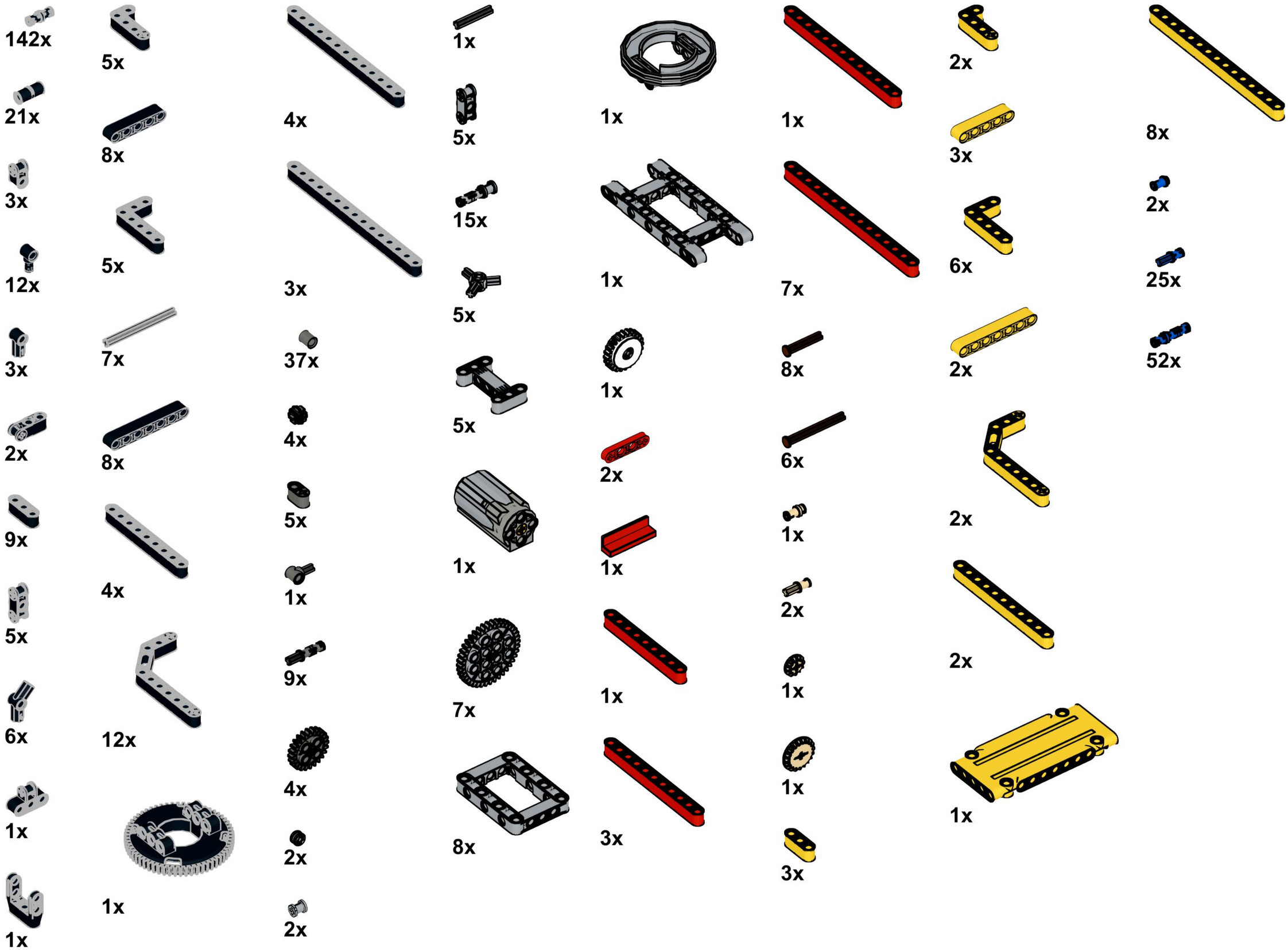
142x
21x
3x
12x
3x
2x
9x
5x
6x
1x
1x
5x
8x
5x
7x
8x
4x
12x
1x
1x
4x
3x
37x
4x
5x
1x
9x
4x
2x
2x
1x
5x
15x
5x
5x
1x
7x
8x
1x
1x
2x
1x
1x
3x
1x
1x
7x
8x
6x
1x
2x
1x
1x
1x
3x
2x
3x
6x
2x
2x
2x
1x
8x
2x
25x
52x