494

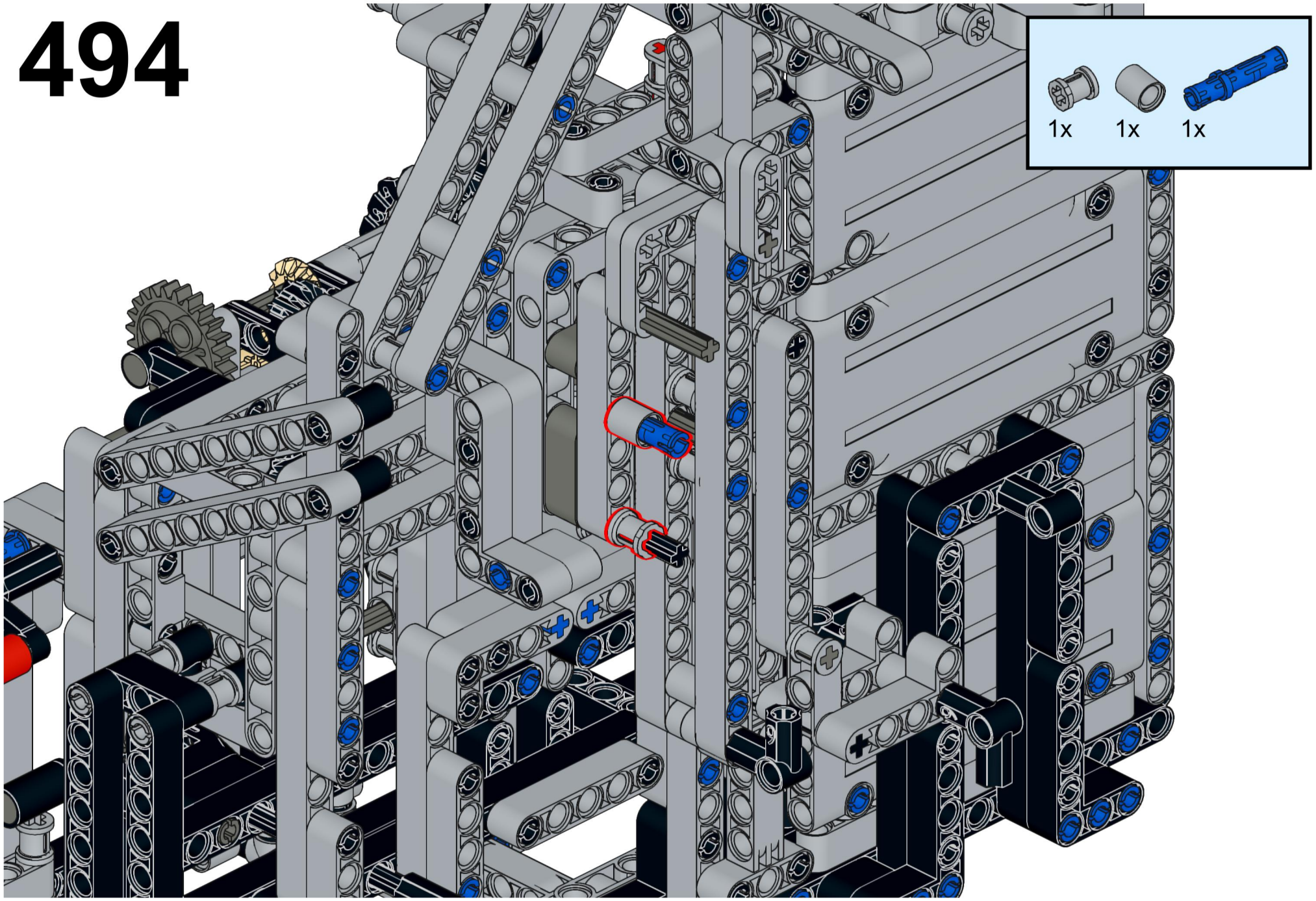

495

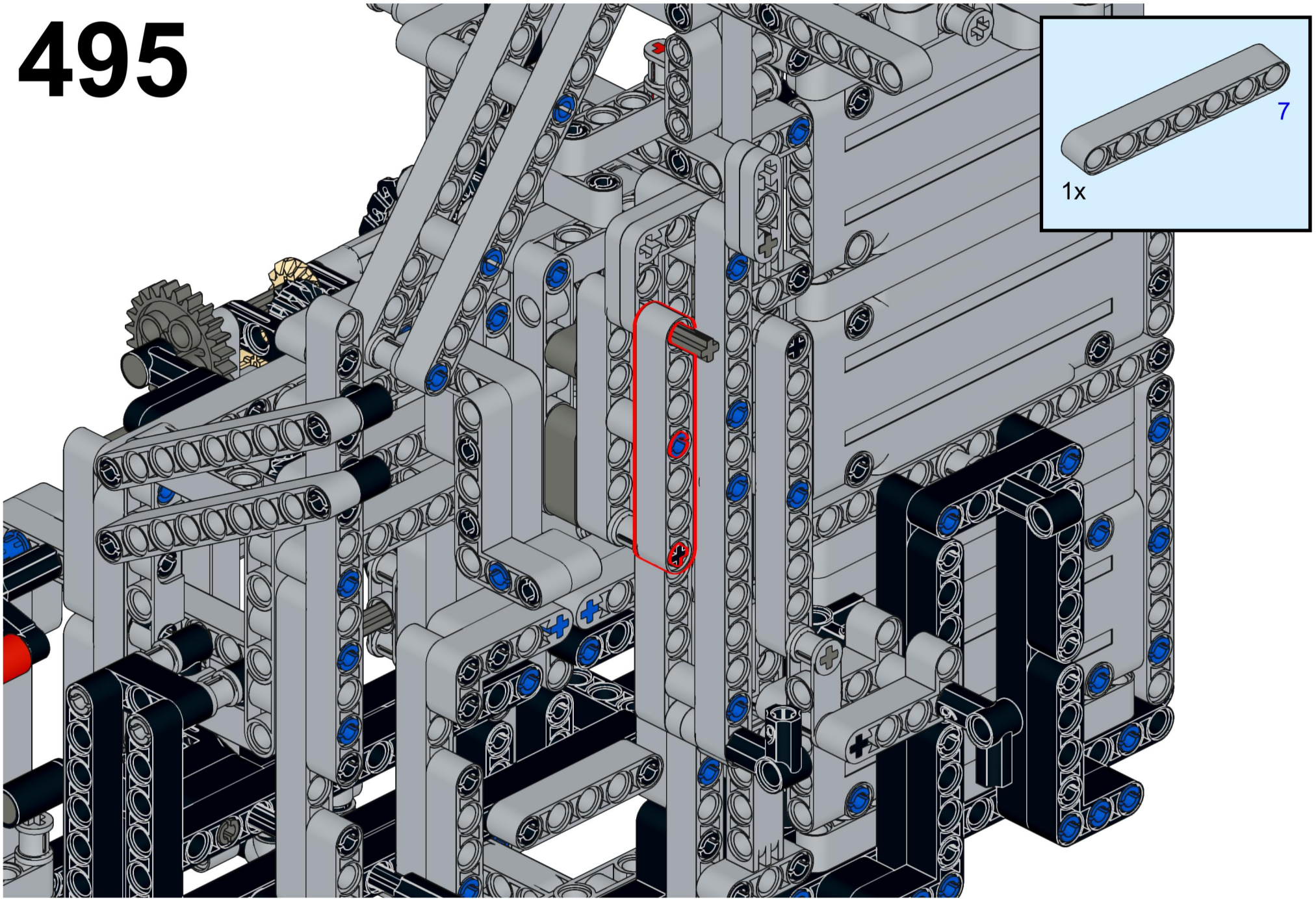

496

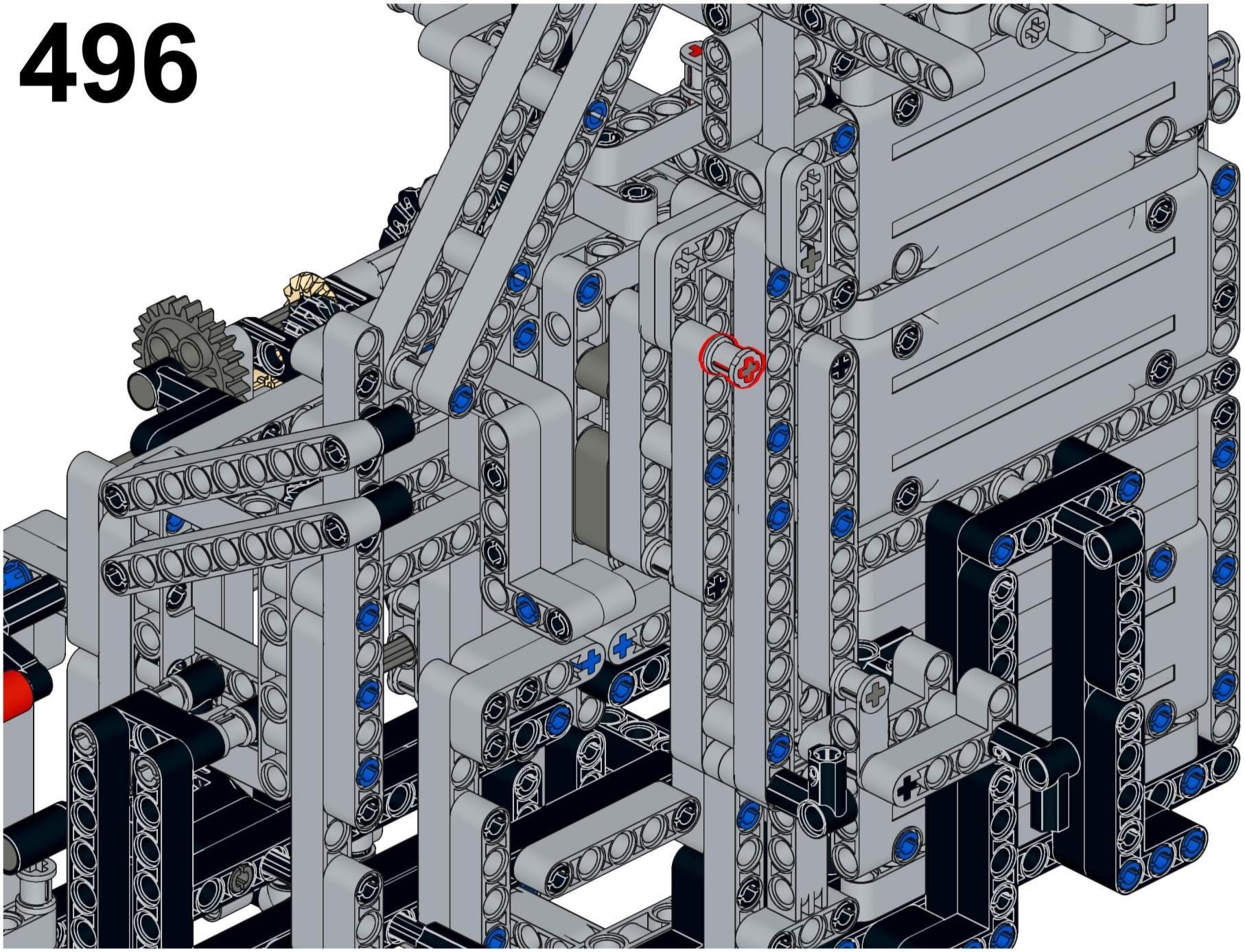

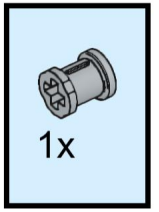

497

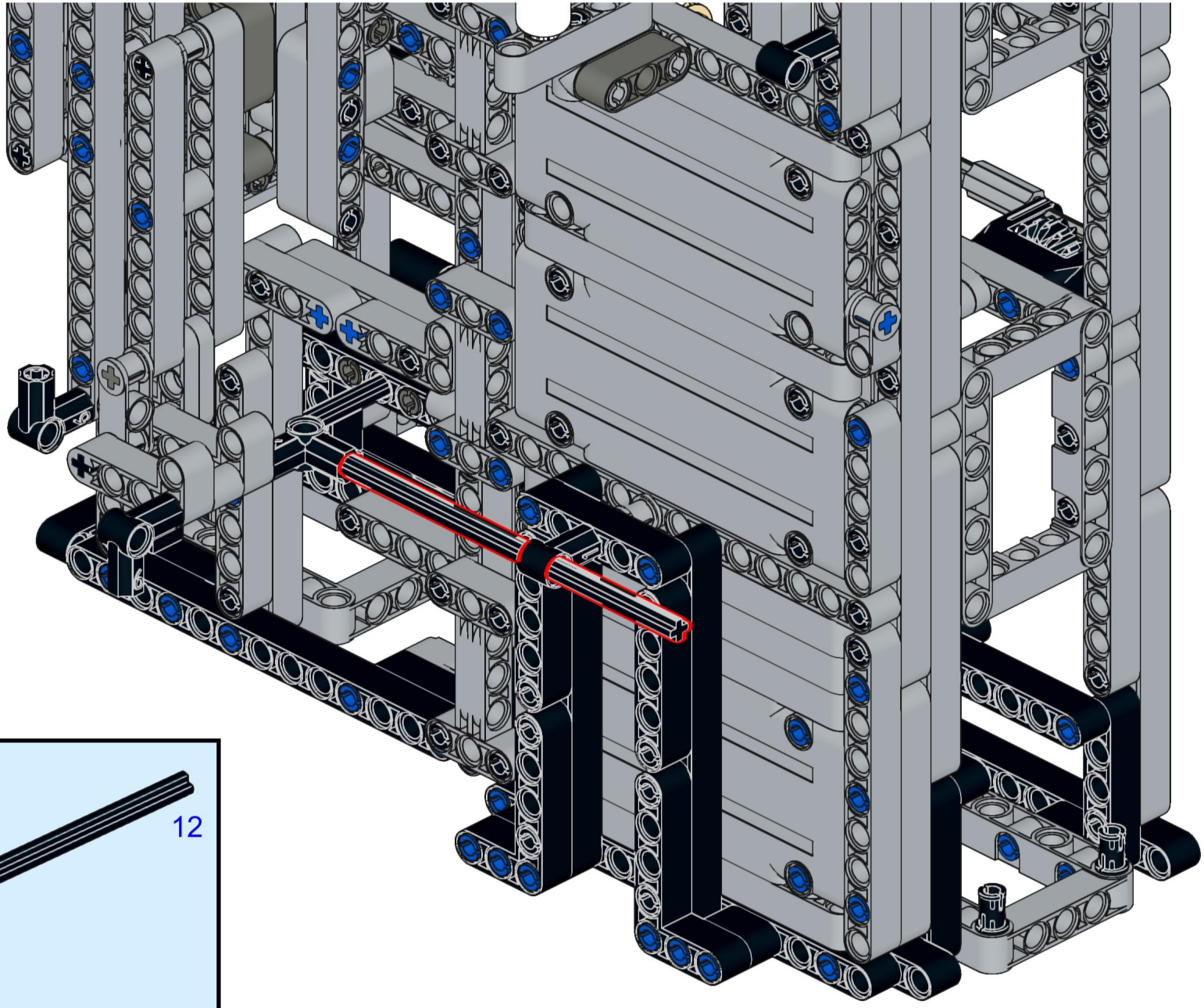

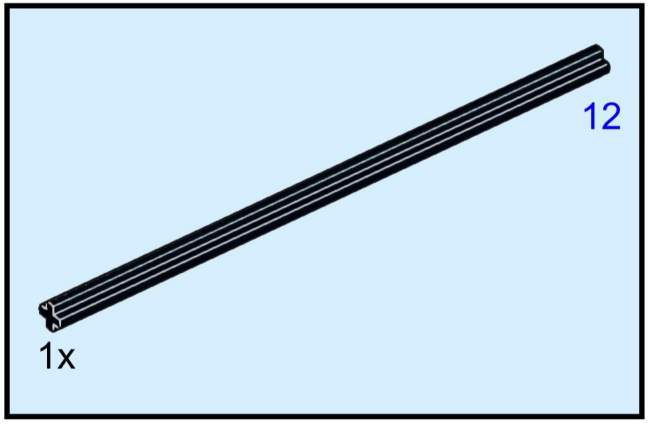

498

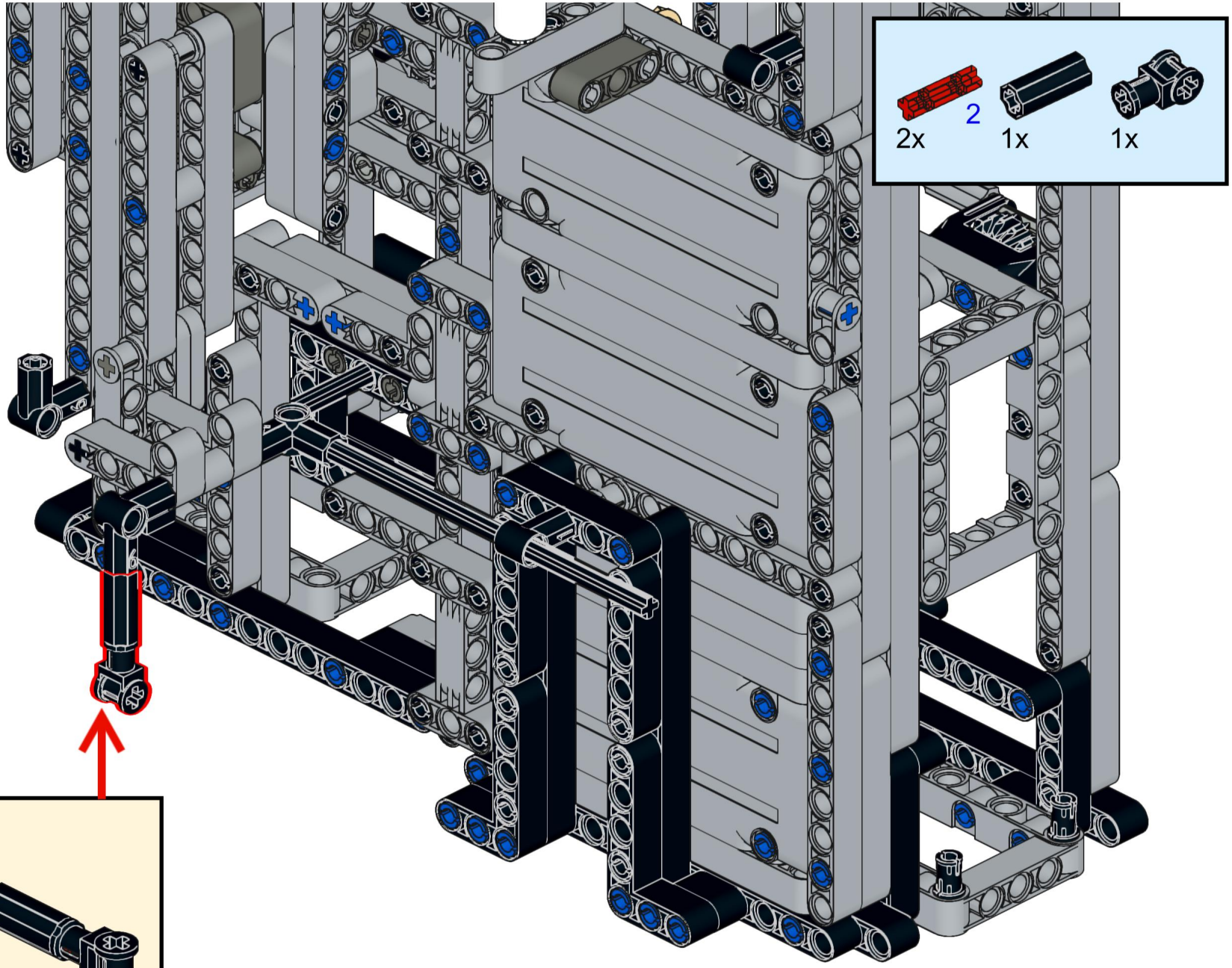

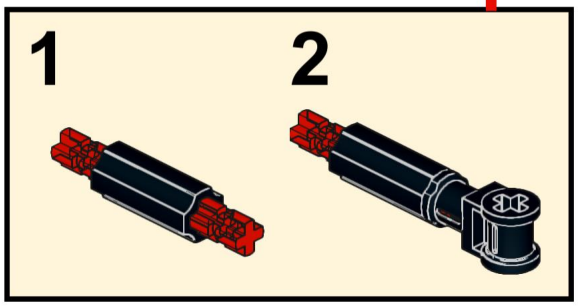

499

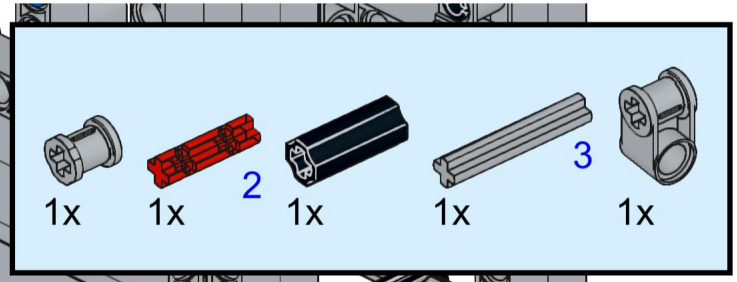

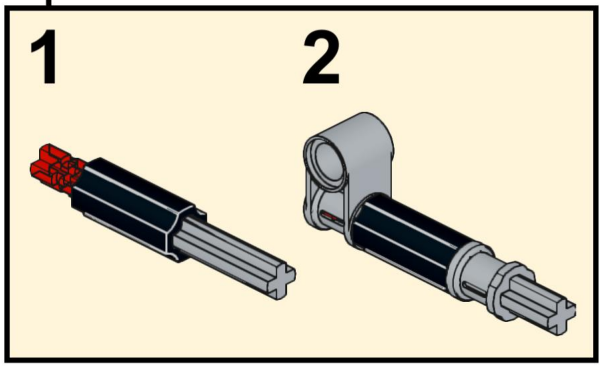

500

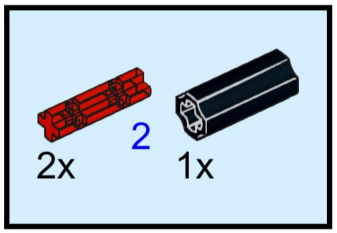



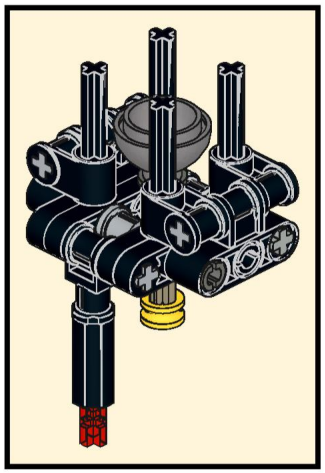

501

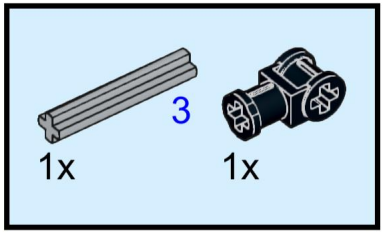

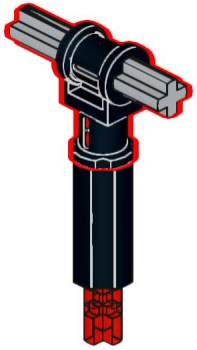

502



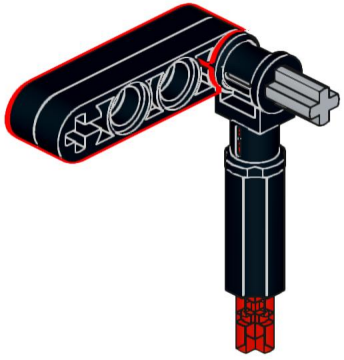

503

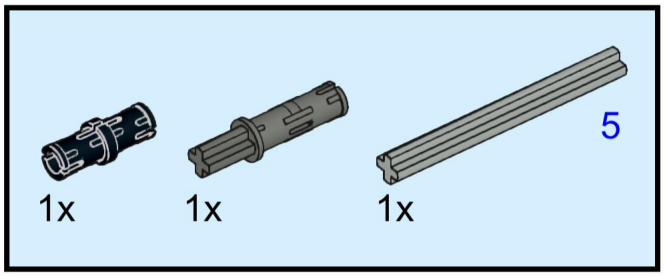

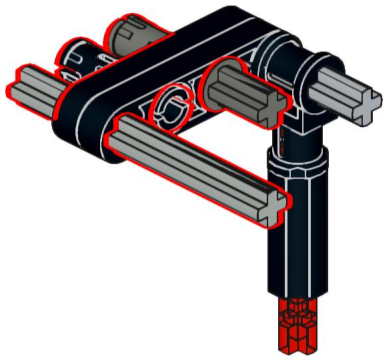

504

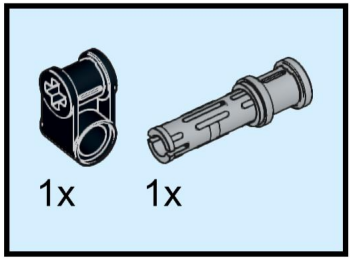

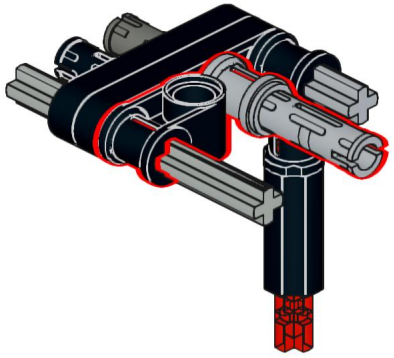

505

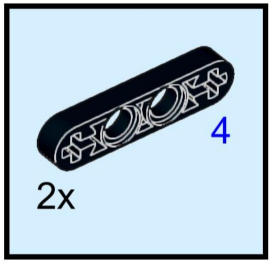

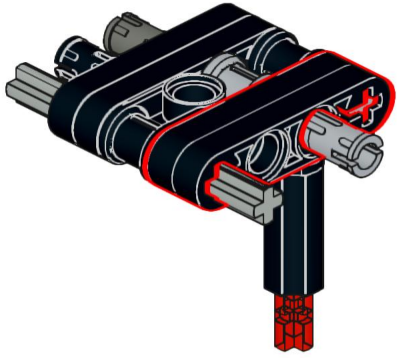

506



1x

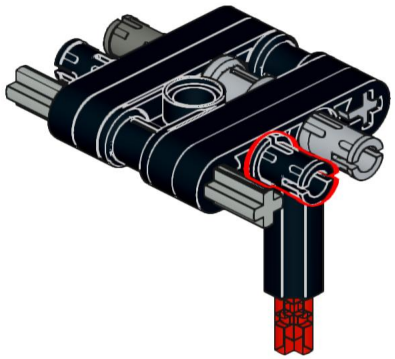

507



2x

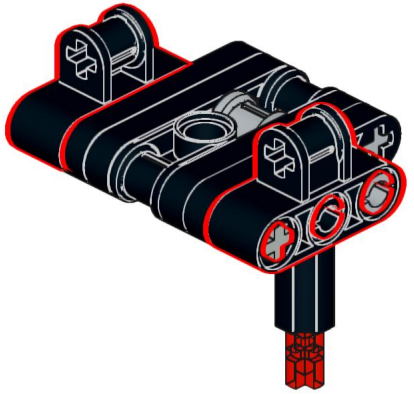

508

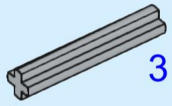

3

2x

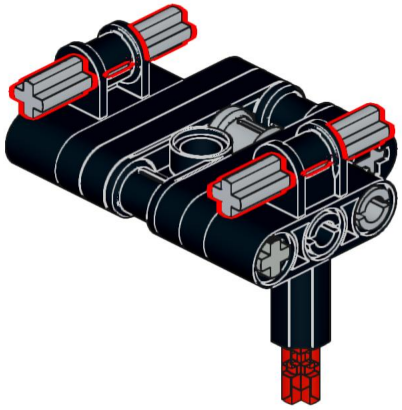

509



4x

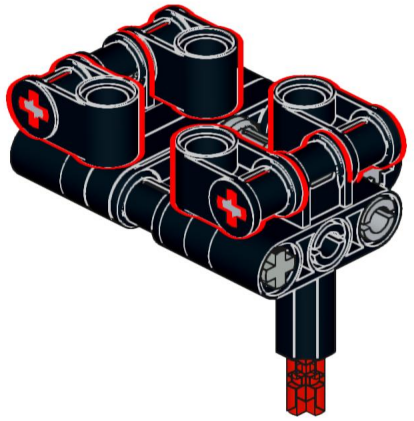

510

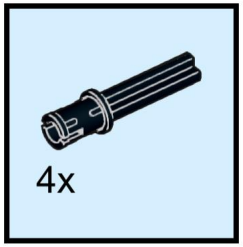

4x

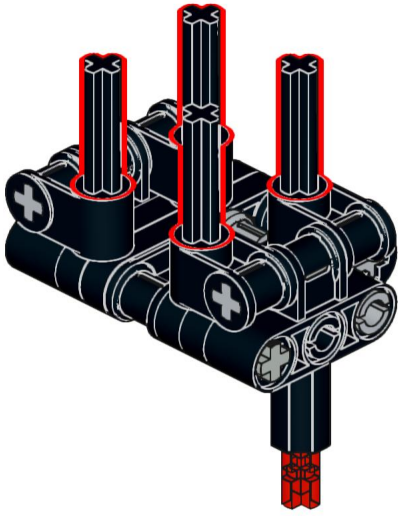

511

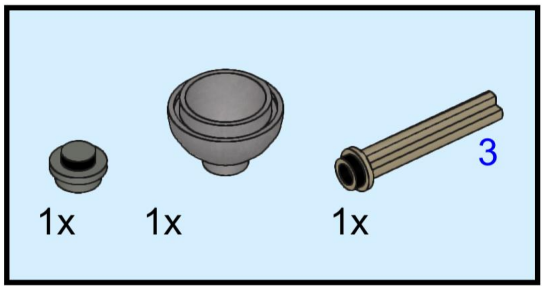

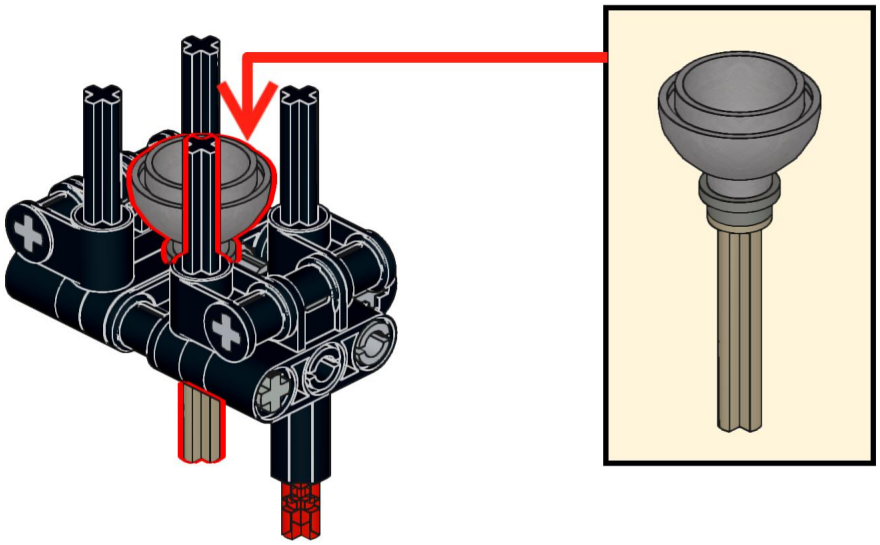

512

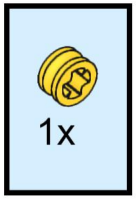

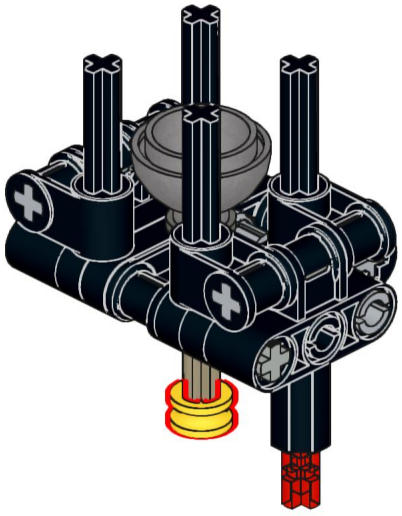

513

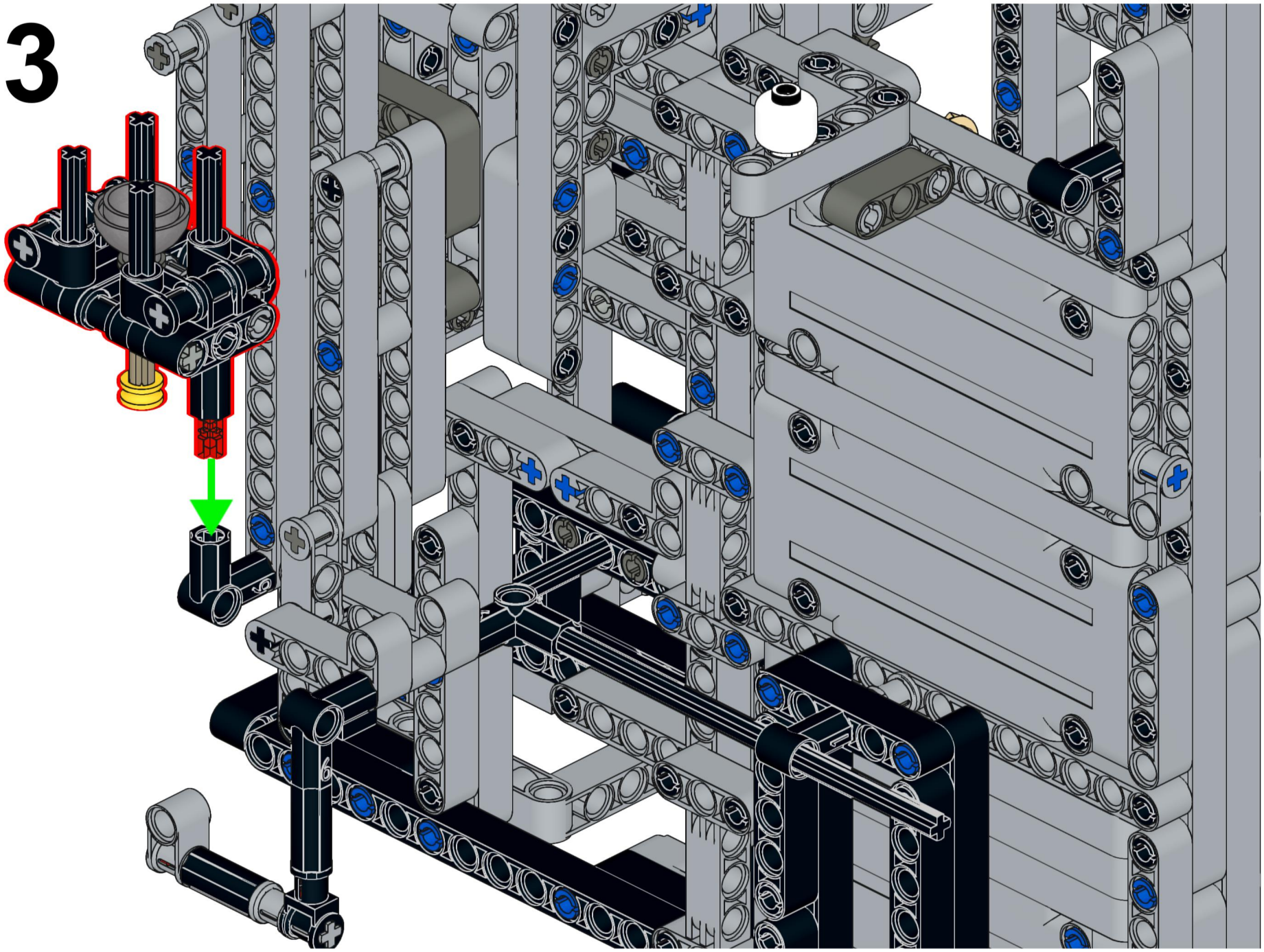

514

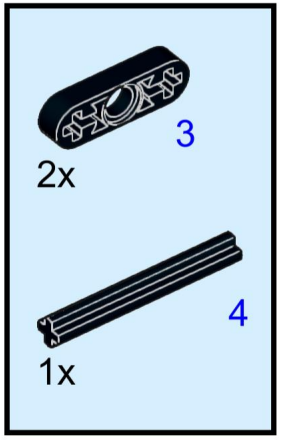

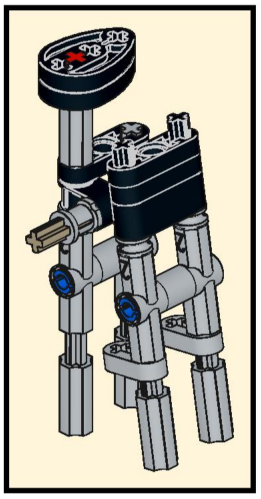

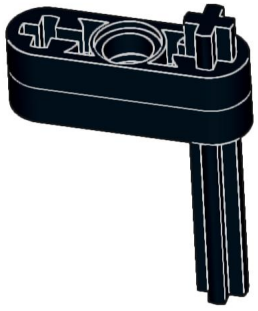

515

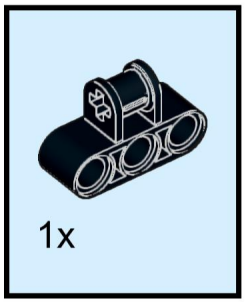

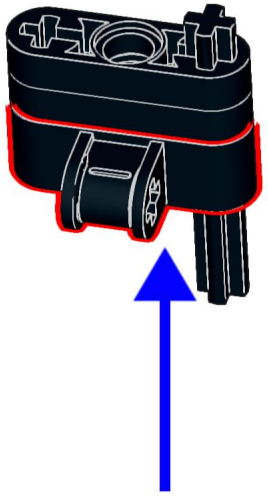

516

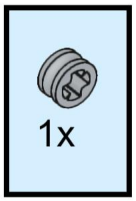

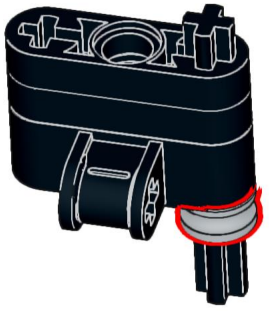

517

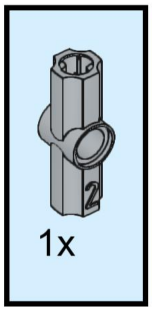

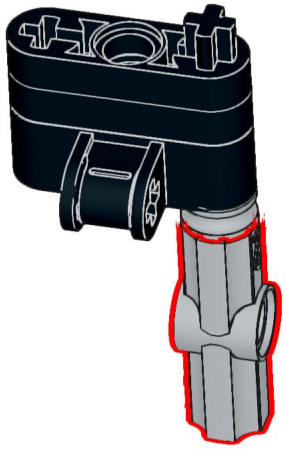

518

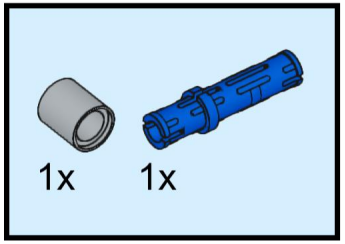

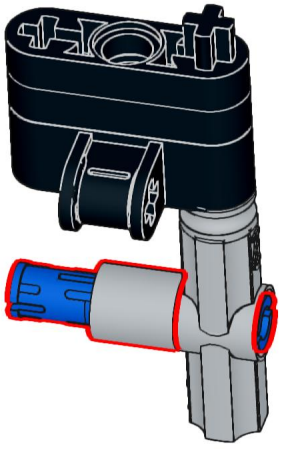

519

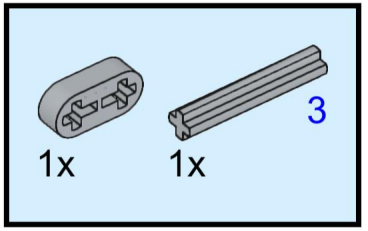

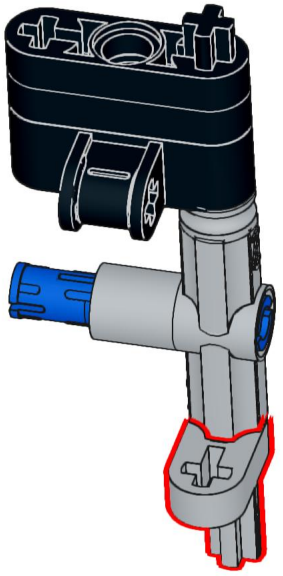

520

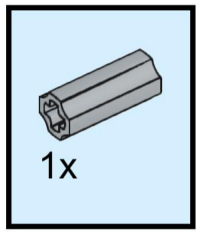

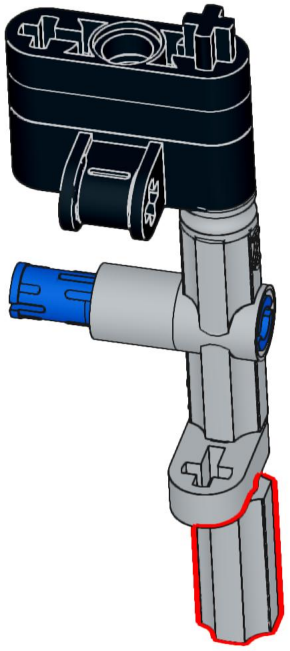

521

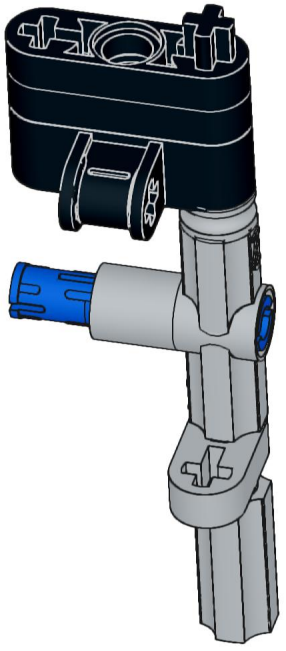

522

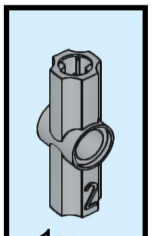

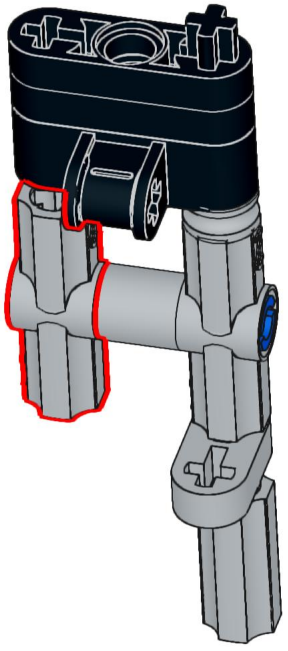

523

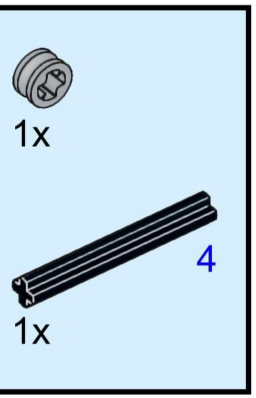

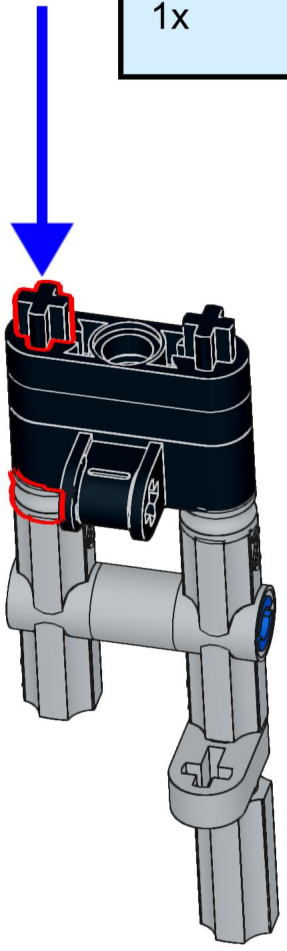

524

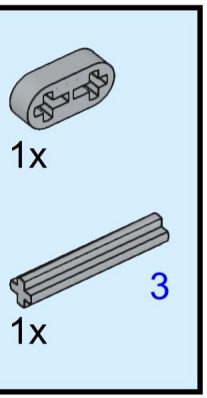

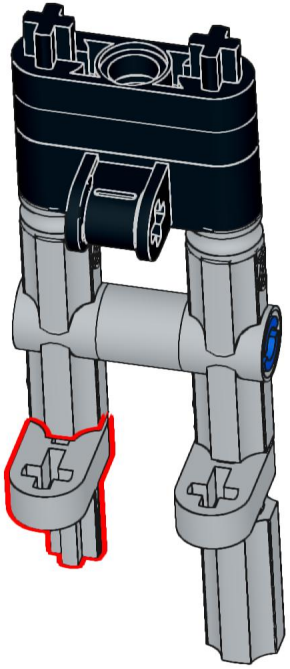

525

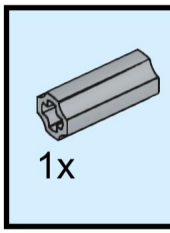

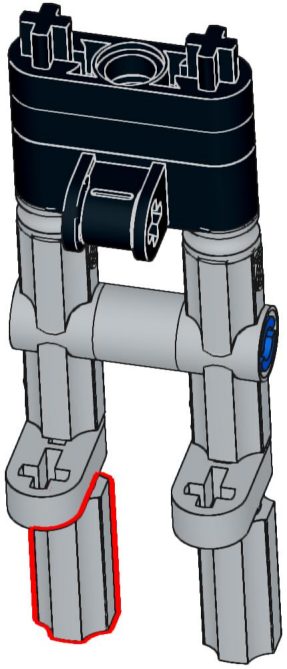

526

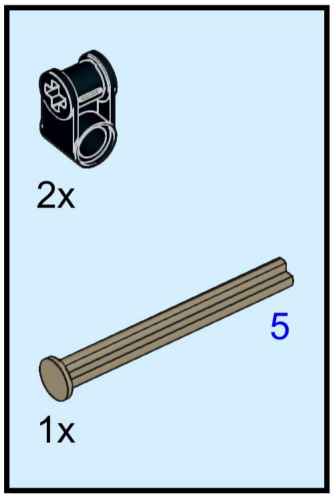

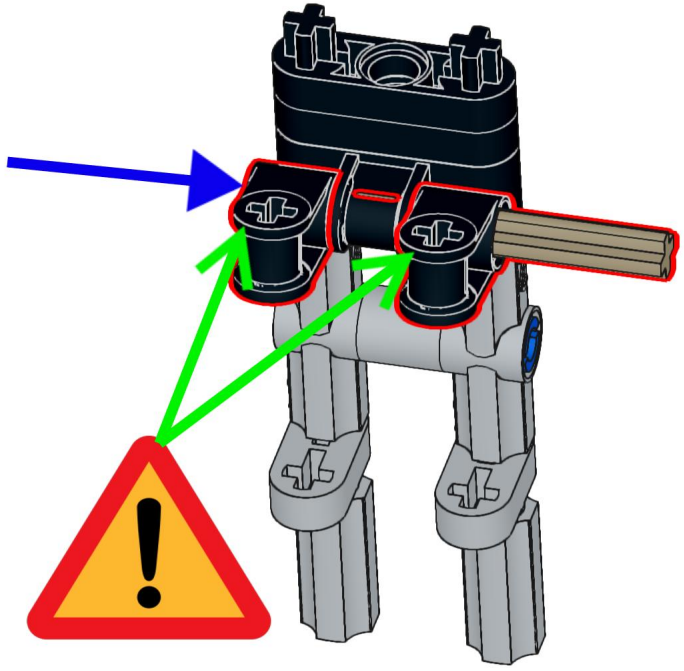

527

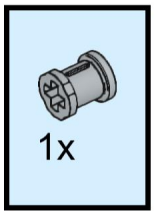

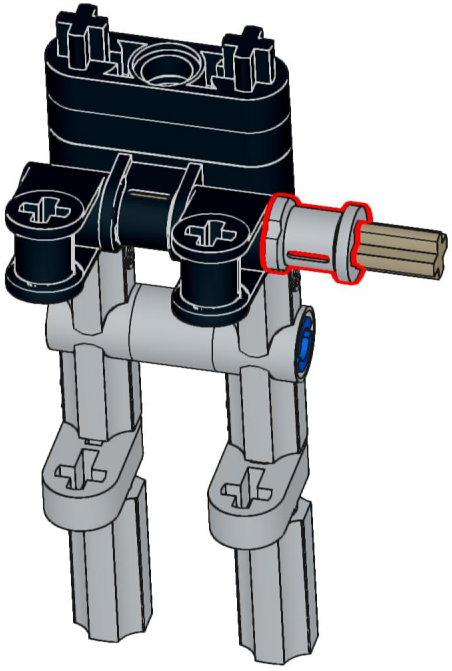

528

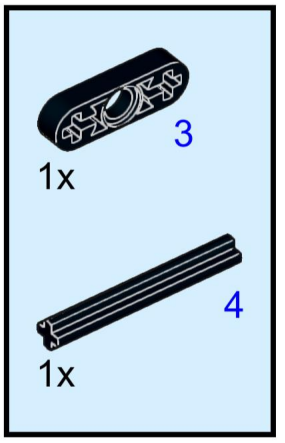

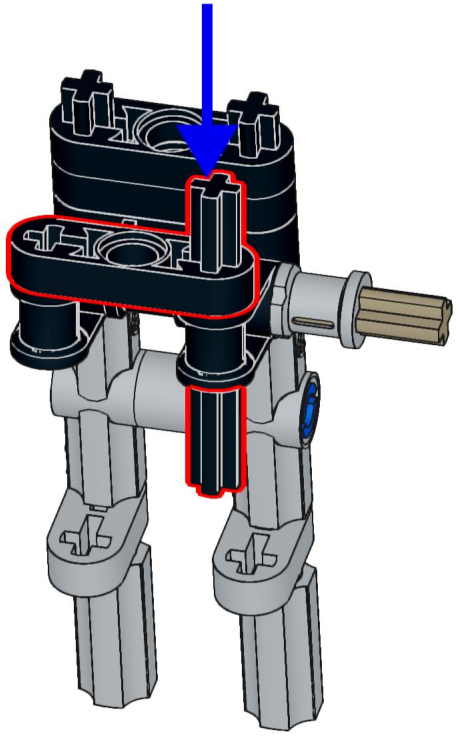

\+ The cross symbol must be oriented up

529

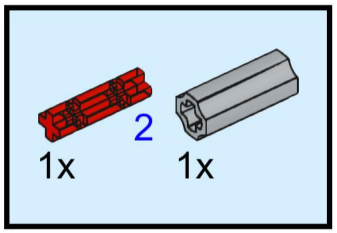

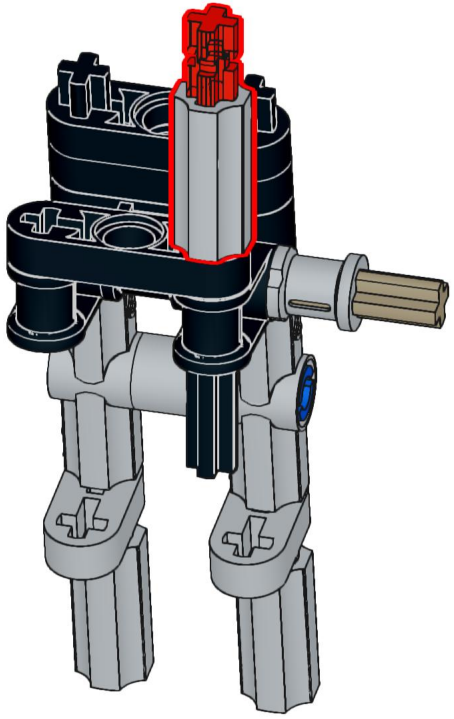

530



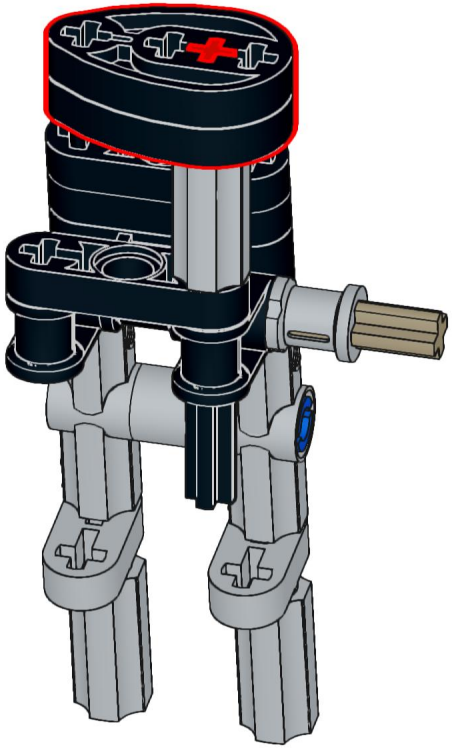

531

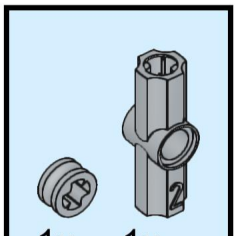

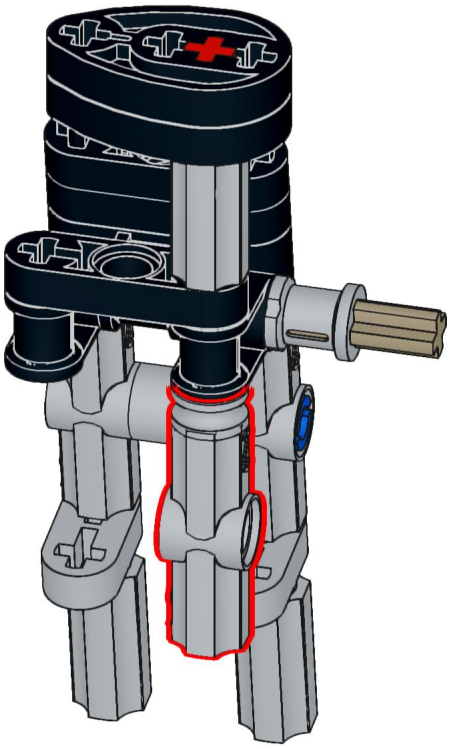

532

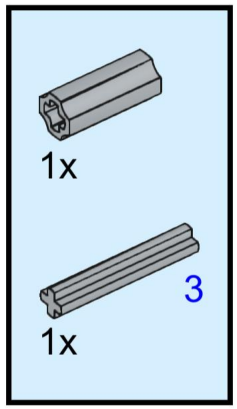

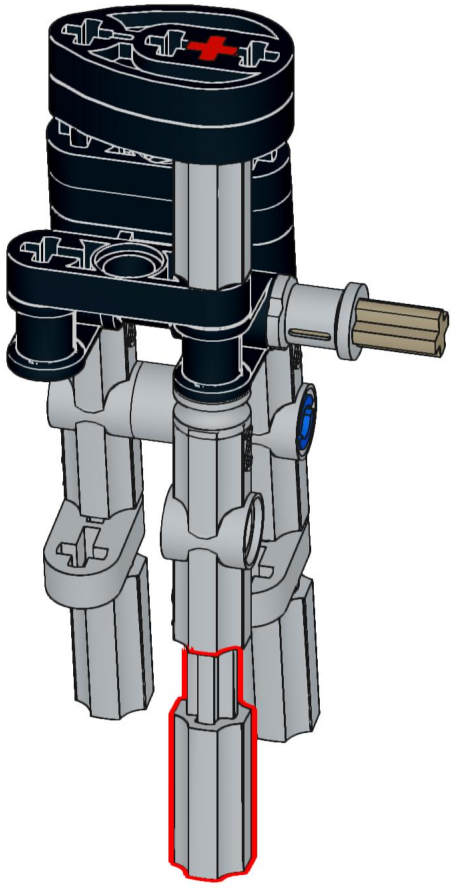

533

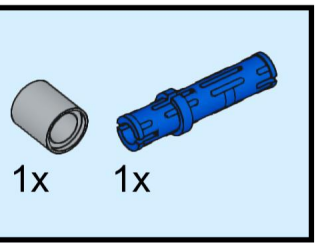

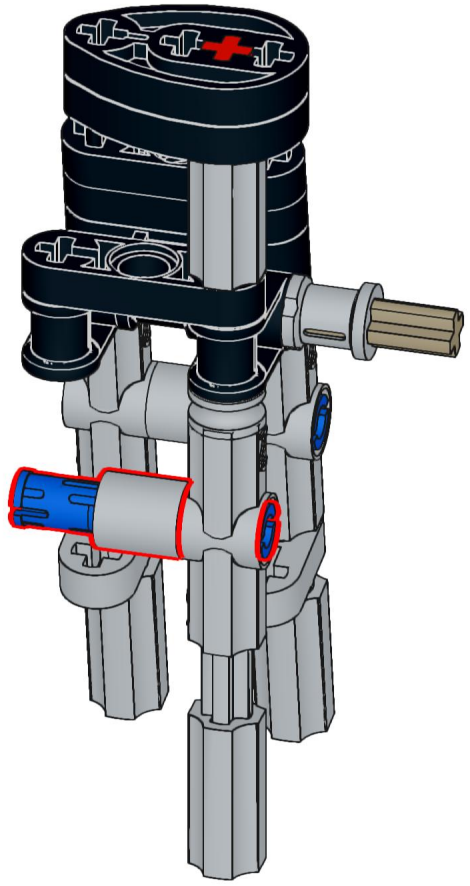

534

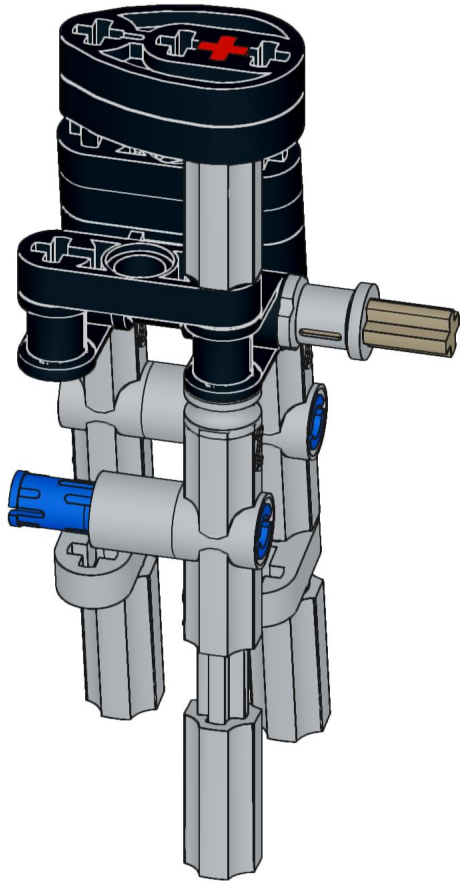

535

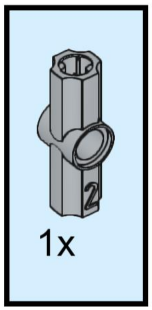

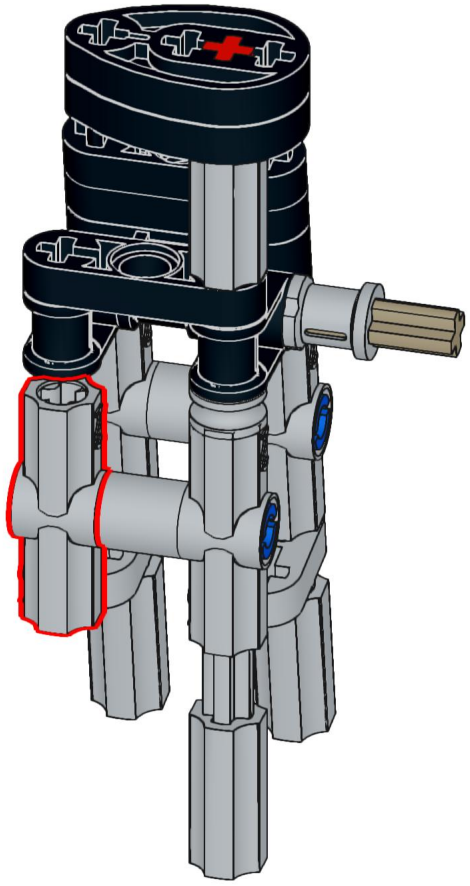

536

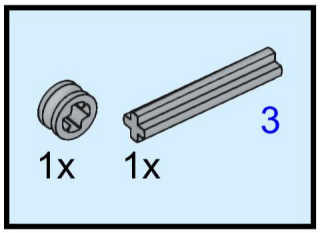

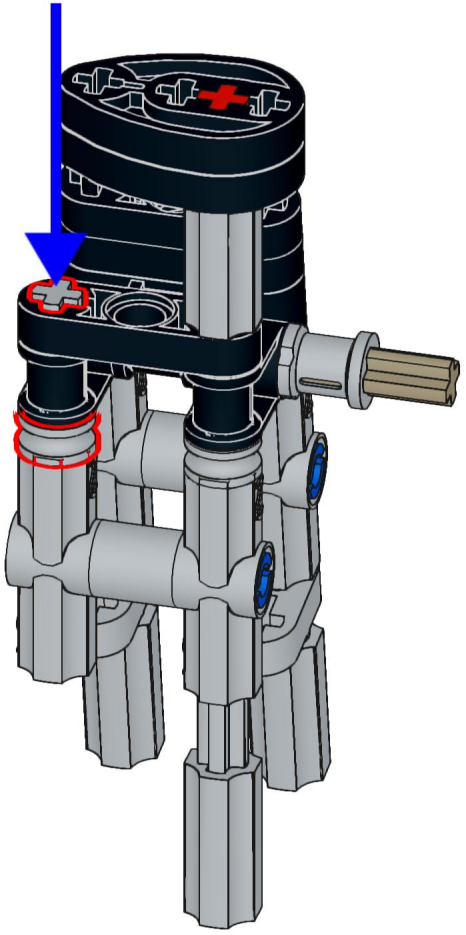

537

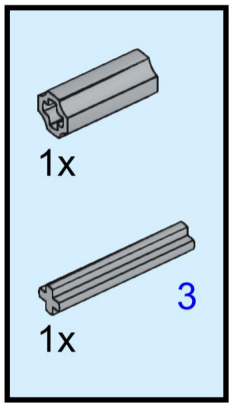

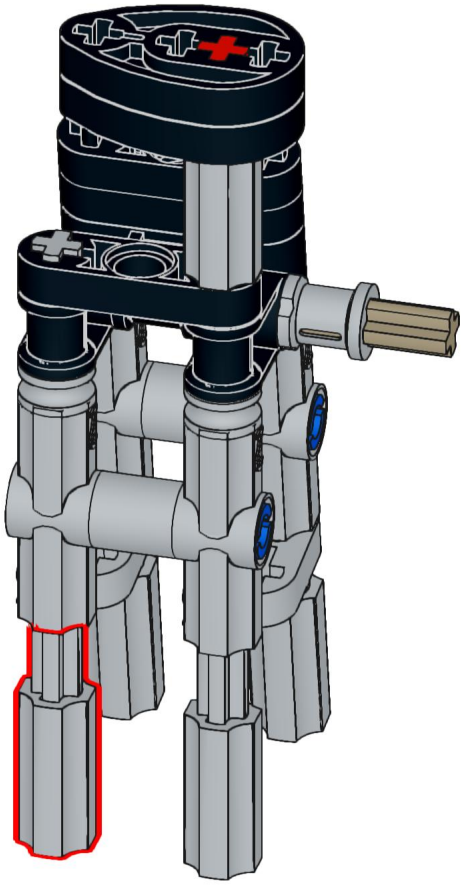

538

